A STUDY OF MINIMUM BAR SPACING FOR BOND IN THIN-SHELL PRECAST CONCRETE

JOHN WALLACE COLLINS
GEORGE FREDERICK JUDD
HARRY HOWARD LOEFFLER, JR.

Thesis
C6

Postgraduate School.
U. S. Naval Academy,
Annapolis, Md.

A STUDY OF MINIMUM BAR SPACING
FOR
BOND IN THIN-SHELL PRECAST CONCRETE

Submitted to

THE FACULTY OF RENSSELAER POLYTECHNIC INSTITUTE

in partial fulfillment of the requirements for

THE DEGREE OF MASTER OF CIVIL ENGINEERING

By

JOHN WALLACE COLLINS

GEORGE FREDERICK JUBB

HARRY HOWARD LOEFFLER, JR.

TROY, NEW YORK

JUNE, 1948

A STUDY OF MINIMUM BAR SPACING

FOR

BOND IN TWIN-SHELL PRECAST CONCRETE

Thesis
C6

Submitted to

THE FACULTY OF RENSSELAER POLYTECHNIC INSTITUTE

in partial fulfillment of the requirements for

THE DEGREE OF MASTER OF CIVIL ENGINEERING

By

JOHN WALLACE COLLINS

GEORGE FREDERICK JUBB

HARRY HOWARD LOEFFLER, JR.

TROY, NEW YORK

JUNE, 1948

ACKNOWLEDGEMENT

For his initial suggestion and outline of this subject and for his continued advice, the authors wish to express their sincere appreciation to Mr. A. Amirikian, Head Designing Engineer, Bureau of Yards and Docks, Navy Department, Washington, D. C.

In addition, appreciation is expressed to Admiral Louis B. Combs, Head of the Department of Civil Engineering, Rensselaer Polytechnic Institute, to Lt. Cdr. H. C. Kropf, Public Works Officer, Naval Supply Depot, Scotia, New York, and particularly to Mr. J. F. Throop of the Mechanics Department of Rensselaer Polytechnic Institute for his valuable suggestions and assistance.

6356

ACKNOWLEDGEMENT

For his initial suggestion and outline of this subject and for his continued advice, the authors wish to express their sincere appreciation to Mr. A. Amirikian, Head Designing Engineer, Bureau of Yards and Docks, Navy Department, Washington, D. C.

In addition, appreciation is expressed to Admiral Louis B. Combs, Head of the Department of Civil Engineering, Rensselaer Polytechnic Institute, to Lt. Cdr. H. C. Kropf, Public Works Officer, Naval Supply Depot, Scotia, New York, and particularly to Mr. J. F. Throop of the Mechanics Department of Rensselaer Polytechnic Institute for his valuable suggestions and assistance.

C336

TABLE OF CONTENTS PAGE

Synopsis 1

Introduction 2

Outline of Proposed Tests. 5

Reinforcing Bars 7

Concrete 8

Description of Specimens 12

Description of Testing Apparatus 19

Testing Yokes 19

Bearing Plates. 21

Dial Arrangement and Attachment 22

Preparation of Specimens for Test. 24

Testing Procedure. 25

Results and Discussions. 29

Plain Bar Tests 38

Variation of Average Bond with Cover and Spacing 40

Discussion on Concept of Bond 44

Stress-Slip Relation as a measure of Bond Efficiency 47

Average Bond as a function of Length-Diameter Ratio. 52

Conclusions. 59

Topics for Further Investigation 60

Bibliography 61

TABLE OF CONTENTS

	PAGE
Synopsis	1
Introduction	2
Outline of Proposed Tests.	5
Reinforcing Bars	7
Concrete	8
Description of Specimens	12
Description of Testing Apparatus	19
Testing Yokes	19
Bearing Plates.	21
Dial Arrangement and Attachment	22
Preparation of Specimens for Test.	24
Testing Procedure.	25
Results and Discussions.	29
Plain Bar Tests	38
Variation of Average Bond	
with Cover and Spacing	40
Discussion on Concept of Bond	44
Stress-Slip Relation as a measure	
of Bond Efficiency	47
Average Bond as a Function of	
Length-Diameter Ratio.	52
Conclusions.	59
Topics for Further Investigation	60
Bibliography	61

TABLE OF CONTENTS (Cont.) PAGE

List of Tabulated Information

Table 1. Physical Properties of Bars. 7

Table 2. Sieve Analysis of Sand 8

Table 3. Sieve Analysis of Coarse Aggregates. . . 9

Table 4. Average Slump of Concrete Mixes. 9

Table 5. Specimens Cast 16

Table 6. Bearing Plate Schedule 21

Table 7. Results from 3/4-in deformed bars. . . . 30

Table 8. Results from 1-in deformed bars. 32

Table 9. Results from Plain Bars. 34

List of Illustrations and Graphs

Figure 1. Test Specimens. 6

Figure 2. Summary of Concrete Tests. 11

Figure 3-A. Type of Forms used 14

Figure 3-B. Forms ready for placing concrete 15

Figure 3-C. A "batch" of test specimens. 18

Figure 4. Sketch of Vibrator 17

Figure 5. Testing Rig. 20

Figure 6. Arrangement of testing yokes 23

Figure 7. Lower yoke with initial dial arrangement 27

Figure 8. Typical failure of specimen. 35

Figure 8-A. Fractured specimen 36

Figure 9. Average Bond vs Spacing and/or Cover . . 39

Figure 10. Variation of Bond with Cover 43

TABLE OF CONTENTS (Cont.) PAGE

List of Tabulated Information

Table 1. Physical Properties of Bars. 7

Table 2. Sieve Analysis of Sand 8

Table 3. Sieve Analysis of Coarse Aggregates. . . 9

Table 4. Average Slump of Concrete Mixes. 9

Table 5. Specimens Cast 16

Table 6. Bearing Plate Schedule 21

Table 7. Results from 3/4-in deformed bars. . . . 30

Table 8. Results from 1-in deformed bars. 32

Table 9. Results from Plain Bars. 34

List of Illustrations and Graphs

Figure 1. Test Specimens. 6

Figure 2. Summary of Concrete Tests. 11

Figure 3-A. Type of Forms used 14

Figure 3-B. Forms ready for placing concrete . . . 15

Figure 3-C. A "batch" of test specimens. 18

Figure 4. Sketch of Vibrator 17

Figure 5. Testing Rig. 20

Figure 6. Arrangement of testing yokes 23

Figure 7. Lower yoke with initial dial arrangement 27

Figure 8. Typical failure of specimen. 35

Figure 8-A. Fractured specimen 36

Figure 9. Average Bond vs Spacing and/or Cover . . 39

Figure 10. Variation of Bond with Cover 43

TABLE OF CONTENTS (Cont.) PAGE

Figure 11. Variation of Ultimate Load with Cover . . 43

Figure 12. Bonding Efficiency Curves 50

Figure 13. Bond Efficiency of 'Type 16' 7/8" nominal bar, from Clark. 51

Figure 14. Average Bond vs L/D ratio for 1" Bars . . 54

Figure 15. Average Bond vs L/D ratio for 3/4" Bars . 55

Figure 16. Average Bond as a Function of Embedment . 58

TABLE OF CONTENTS (Cont.) PAGE

Figure 11. Variation of Ultimate Load with Cover . . 43

Figure 12. Bonding Efficiency Curves 50

Figure 13. Bond Efficiency of "Type 16" 7/8" nominal bar, from Clark. 51

Figure 14. Average Bond vs L/D ratio for 1" Bars . . 54

Figure 15. Average Bond vs L/D ratio for 3/4" Bars . 55

Figure 16. Average Bond as a Function of Embedment . 58

A STUDY OF MINIMUM BAR SPACING FOR BOND IN THIN-SHELL PRECAST CONCRETE

SYNOPSIS

The purpose of the tests was to determine the minimum bar spacing and clear cover required to develop bond in thin-shell, precast concrete.

The tests were of the pull-out type in which round bars of two sizes were cast in a horizontal position; clear spacing and cover (always equal) and the length of embedment were varied. The slips of the bars were measured at the loaded and free ends.

These tests indicate that for close spacing and thin cover the resistance to pull-out is a function of these variables and bar size for both deformed and plain bars, and in general, the greater the cover, the greater the bond resistance. Bars cast horizontally in thin sections with very stiff mixes are subject to water gain.

A STUDY OF MINIMUM BAR SPACING FOR BOND IN THIN-SHELL PRECAST CONCRETE

SYNOPSIS

The purpose of the tests was to determine the minimum bar spacing and clear cover required to develop bond in thin-shell, precast concrete.

The tests were of the pull-out type in which round bars of two sizes were cast in a horizontal position; clear spacing and cover (always equal) and the length of embedment were varied. The slips of the bars were measured at the loaded and free ends.

These tests indicate that for close spacing and thin cover the resistance to pull-out is a function of these variables and bar size for both deformed and plain bars, and in general, the greater the cover, the greater the bond resistance. Bars cast horizontally in thin sections with very stiff mixes are subject to water gain.

INTRODUCTION

The tests of pull-out specimens reported herein constitute the first phase of an investigation on bond efficiency in thin-shell precast concrete. The investigation was initiated on the suggestion of Mr. A. Amirikian, (24, 27)* Chief of the Design Section, Bureau of Yards and Docks, and was conducted by Lts. J. W. Collins, G. F. Jubb and H. H. Loeffler, all (CEC) USN, at Rensselaer Polytechnic Institute, Troy, New York.

Considerable investigation has been carried out in the study of bond since the turn of the century. Notable have been the works of Withey, Abrams, and Gilkey; and more recently, studies conducted by Watstein and Clark at the U. S. Bureau of Standards.

Bulletins by Withey (1, 2) in 1906 and 1909 were among the early contributions to the literature on bond. In 1913 Abrams (3) published his "Tests of Bond Between Concrete and Steel" which still stands as a classic on reinforced concrete research. In 1940 Gilkey's (18) "Bond Between Concrete and Steel" served to greatly stimulate research and thought toward a better understanding of the concept of bond. The numerous studies on bond have produced a variety of conclusions, some in agreement, some conflicting; but each has served to cast new light upon the variables involved. The subject is by no means closed.

* Numbers refer to articles as listed in Bibliography.

INTRODUCTION

The tests of pull-out specimens reported herein constitute the first phase of an investigation on bond efficiency in thin-shell precast concrete. The investigation was initiated on the suggestion of Mr. A. Amirikian, (24, 27)* Chief of the Design Section, Bureau of Yards and Docks, and was conducted by Lts. J. W. Collins, U. S. Navy and R. H. Loeffler, all (CEC) USN, at Rensselaer Polytechnic Institute, Troy, New York.

Considerable investigation has been carried out in the study of bond since the turn of the century. Notable have been the works of Withey, Abrams, and Gilkey; and more recently, studies conducted by Watstein and Clark at the U. S. Bureau of Standards.

Bulletins by Withey (1, 2) in 1906 and 1909 were among the early contributions to the literature on bond. In 1913 Abrams (3) published his "Tests of Bond Between Concrete and Steel" which still stands as a classic on reinforced concrete research. In 1940 Gilkey's (18) "Bond between Concrete and Steel" served to greatly stimulate research and brought forward a better understanding of the concept of bond. The numerous studies on bond have produced a variety of conclusions, some in agreement, some conflicting; but each has served to cast new light upon the variables involved. The subject is by no means closed.

* Numbers refer to articles as listed in Bibliography.

The advent of the use of thin-shell precast sections for use as girders, beams, and even in landing craft has begun, we believe, an era of utilization of prefabricated reinforced thin sections of concrete that will play an increasingly important part in construction of all kinds in the coming years.

The increasing use of thin sections has brought out the need for investigation of bond in thin sections, as few specifications cover the design of thin-shell sections with relatively large reinforcing bars.

Previous studies of bond utilizing the pull-out test have been single-bar specimens with greater than one-inch cover. The cover employed was in general not a fundamental variable, although Gilkey in his tests introduced this variable to a limited degree by placing some of the bars in an eccentric position. Gilkey and others have considered the relation between pull-out tests and beam tests, and more recently ACI Committee 208 (23) has reported tentative specifications for determining bond resistances using the beam method. This study utilized pull-out tests using three-bar specimens with cover ranging from 5/16-inch to 1-inch, and round deformed reinforcing bars of one type; two sizes, 3/4-inch and 1-inch.

Recognizing the variables in concrete, an attempt was made to hold constant all those except the specified variations in specimens. To this end all deformed bars were from the same lot and contained equal amounts of mill scale and rust. All cement was from the same lot; aggregate and sand were from the same vicinity, respectively. The casting of specimens was carried out with the exact repetition of procedure.

It is to be noted that preliminary results indicated a tension failure in the concrete due to the wedging action of the lugs on the deformed bars before a reasonable utilization of bond. This led to the casting of a batch of plain-bar specimens in an attempt to realize a higher bond efficiency as it was presumed that less wedging action would be present to cause splitting.

Considerable time-consuming preparation was involved in devising the procedure for casting the specimens and in the fabrication of the testing rig, the number of physical variables involved being considerable.

It is recognized that the use of a spherical bearing block, slotted to take the three bars in the testing yoke, would have eliminated any possibility of eccentricity in loading, but in lieu of availability, the method arrived at gave reasonably consistent results. It is regrettable that time did not permit the investigation of the two and one-bar specimens, however, the testing procedure and apparatus were designed to cover the complete series and it is hoped that this may be done in the future.

It is to be noted that preliminary results indicated a tension failure in the concrete due to the welding action of the lugs on the deformed bars before a reasonable utilization of bond. This led to the casting of a batch of plain-bar specimens in an attempt to realize a higher bond efficiency as it was presumed that less wedging action would be present to cause splitting.

Considerable time-consuming preparation was involved in fabrication of the testing rig, the number of physical variables involved being considerable.

It is recognized that the use of a spherical bearing block, slotted to take the three bars in the testing yoke, would have eliminated any possibility of eccentricity in loading, but in lieu of availability, the method arrived at gave reasonably consistent results. It is regrettable that time did not permit the investigation of the two and one-bar specimens, however, the testing procedure and apparatus were designed to cover the complete series and it is hoped that this may be done in the future.

OUTLINE OF PROPOSED TESTS

SERIES OF TESTS:

I. 1/4" max. aggregate
II. 3/8" max. aggregate
III. 1/2" max. aggregate

TYPES OF TEST SPECIMENS:

A. One-bar prism (See Figure 1)
B. Two-bar prism (See Figure 1)
C. Three-bar prism (See Figure 1)

VARIATIONS IN SPECIMENS:

1. Size of Reinforcing:
   A. 3/4" bar
   B. 1" bar
   C. 1" bar (Square).

2. Length of Embedment:
   A. 12-diameter embedment
   B. 18-diameter embedment
   C. 24-diameter embedment

3. Clear Bar Spacing and Cover:
   A. 1.25 X max. size of aggregate
   B. 1.50 X max. size of aggregate
   C. 2.00 X max. size of aggregate

NOTES:

A. Number of Test Specimens:
   Minimum number of each specimen = 2
   Total number of specimens for each series = 162
   Total number of specimens for program = 486

B. Design Data:
   Class of concrete = 5000 psi
   Mix: 1 : 1 1/2 : 1 3/4
   Reinforcing = Deformed bars.
   Horizontal pours, Mechanical vibration and "Field" Curing

OUTLINE OF PROPOSED TESTS

SERIES OF TESTS:

I. 1\4" max. aggregate
II. 3\8" max. aggregate
III. 1\2" max. aggregate

TYPES OF TEST SPECIMENS:

A. One-bar prism (See Figure 1)
B. Two-bar prism (See Figure 1)
C. Three-bar prism (See Figure 1)

VARIATIONS IN SPECIMENS:

1. Size of Reinforcing:
   A. 3\4" bar
   B. 1" bar
   C. 1" bar (Square).

2. Length of Embedment:
   A. 12-diameter embedment
   B. 18-diameter embedment
   C. 24-diameter embedment

3. [illegible] Bar Spacing and Cover:
   A. 1.25 X max. size of aggregate
   B. 1.50 X max. size of aggregate
   C. 2.00 X max. size of aggregate

NOTES:

A. Number of Test Specimens:
   Minimum number of each specimen = 2
   Total number of specimens for each series = 162
   Total number of specimens for program = 486

B. Design Data:
   Class of concrete = 5000 psi
   Mix: 1 : 1 1\2 : 3 3\4
   Reinforcing = Deformed bars.
   Horizontal ports, Mechanical vibration and "Field" Curing

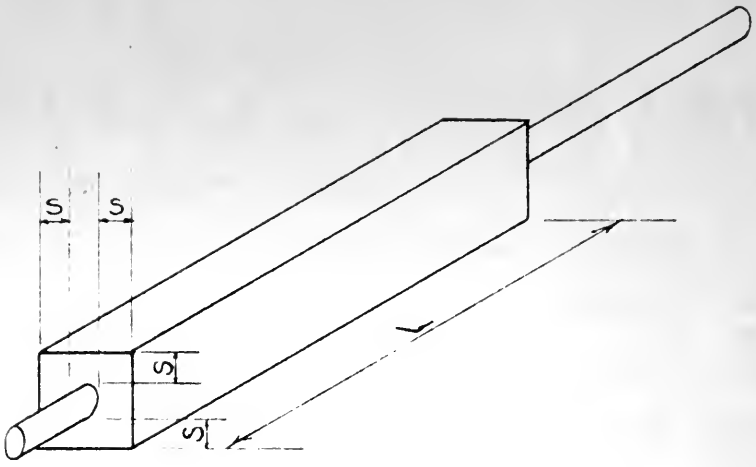

A

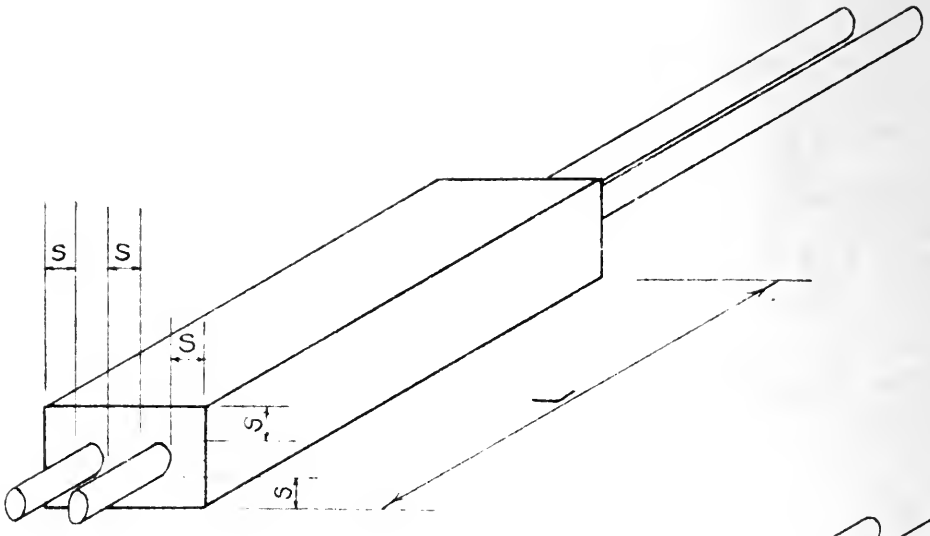

B

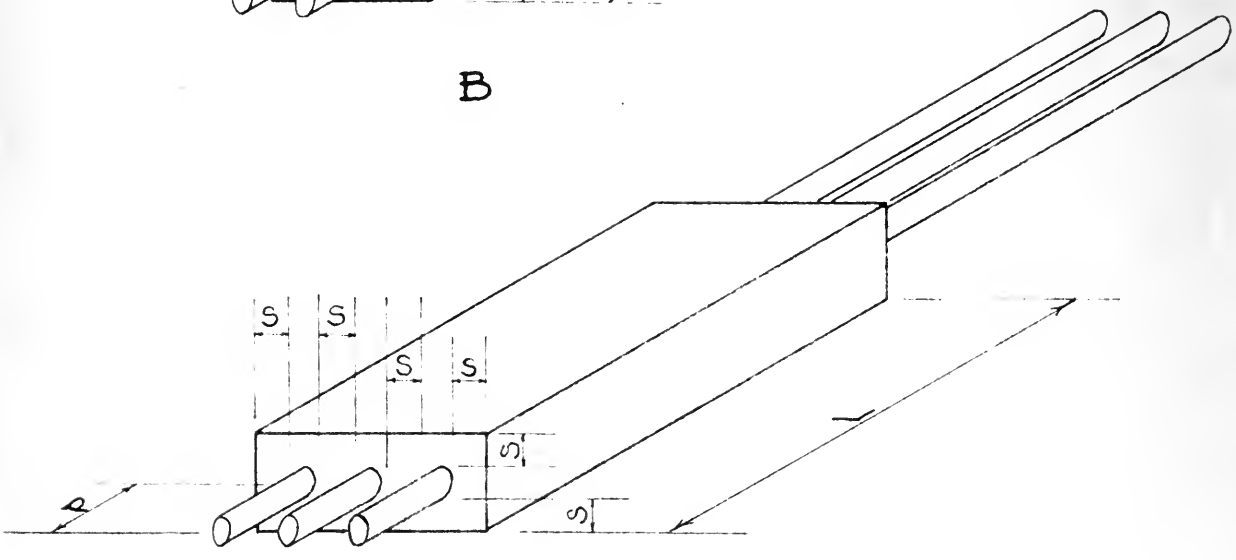

C

P= 1'8" at loaded end & 1" at free end.

S = Clear Spacing & Cover
L = Length of Embedment

FIG. 1. TEST SPECIMENS

REINFORCING BARS

All deformed bars used were of the "Bamboo Bar" pattern, manufactured by Carnegie-Illinois Steel Corp., intermediate grade, of nominal 3/4- and 1-inch round. Plain bars used were commercial grade cold rolled stock of 3/4 and 1-1/16-inch round.

Diameters and areas were determined from the length-weight measurements of the bars in accordance with ASTM designation A 15-39 and stress calculations were based on the areas thus determined.

The yield point was determined in a 100,000-lb capacity Southwark - Emery testing machine. Load-strain curves were plotted for the bars and the modulus of elasticity so determined was used in computing the correction to be applied to the lower dial readings for slip at the loaded end.

Bar stresses were all within the elastic range for the tests conducted.

The deformed bars were covered with the usual mill scale and had little to no rust. Except as noted the plain bars were clean and smooth with little rust.

Table 1.

PHYSICAL PROPERTIES OF BARS

Nominal Bar Dia.	Type	Area Sq.In.	Yield Pt. psi.	Ultimate psi.	Mod. Elas. ksi.
1"ø	d	0.786	41700	67700	29500
3/4"ø	d	0.442	48800	78000	29500
1"ø	p	0.885	56800	62500	29600
3/4"ø	p	0.438	61300	86000	29400

REINFORCING BARS

All deformed bars used were of the "Bamboo Bar" pattern, manufactured by Carnegie-Illinois Steel Corp., intermediate grade, of nominal 3/4- and 1-inch round. Plain bars used were commercial grade cold rolled stock of 3/4 and 1-1/16-inch round.

Diameters and areas were determined from the length-weight measurements of the bars in accordance with ASTM designation A 15-39 and stress calculations were based on the areas thus determined.

The yield points was determined in a 100,000-lb capacity Southwark - Emery testing machine. Load-strain curves were plotted for the bars and the modulus of elasticity so determined was used in computing the correction to be applied to the lower dial readings for slip, at the loaded end.

Bar stresses were all within the elastic range for the tests conducted.

The deformed bars were covered with the usual mill scale and had little to no rust. Except as noted the plain bars were clean and smooth with little rust.

Table 1.

PHYSICAL PROPERTIES OF BARS

Nominal Bar Dia.	Type	Area Sq.In.	Yield Pt. psi.	Ultimate psi.	Mod. elas. psi.
1"ø	d	0.786	41700	67700	29500
3/4"ø	d	0.442	48800	78000	29500
1"ø	p	0.885	56800	62500	29600
3/4"ø	p	0.434	61300	86000	29400

CONCRETE

Concrete was machine mixed for three minutes and proportioned by volume in the ratio 1:1-1/2:1-3/4. The water-cement ratio was 5.0 gal. per sack.

Weight Ratios of Mixes

1/4-in max aggregate	1:1.757:1.940	:0.444 water
3/8-in max aggregate	1:1.757:1.880	on all
1/2-in max aggregate	1:1.750:1.813	

Portland cement meeting the current standard specifications of the ASTM for type III cement was used. (LeHigh-Hi Early).

The coarse aggregate was local limestone, crushed. (See Table 3). The fine aggregate was a Long Island sand known locally as "Cow Bay" sand. (See Table 2).

Table 2.

Sieve Analysis of Sand

U. S. Std. Sieve No.	Percentage Passing by Weight
4	100%
8	97.2
16	78.9
30	49.4
50	11.6
100	1.6

Dry rodded weight 107 lb/cu.ft.

CONCRETE

Concrete was machine mixed for three minutes and proportioned by volume in the ratio 1:1-1/2:1-3/4. The water-cement ratio was 5.0 gal. per sack.

Weight Ratios of Mixes

1/4-in max aggregate	1:1.757:1.940	0.444 water
3/8-in max aggregate	1:1.757:1.880	on all
1/2-in max aggregate	1:1.750:1.813	

Portland cement meeting the current standard specifications of the ASTM for type III cement was used. (Medium-fast early). The coarse aggregate was local limestone, crushed. (See Table 3). The fine aggregate was a local Island sand known locally as "Cow Bay" sand. (See Table 2).

Table 2.

Sieve Analysis of Sand

U. S. Std. Sieve No.	Percentage Passing by Weight
4	100%
8	97.3
16	72.9
30	44.4
50	11.6
100	1.6

Dry rodded weight 107 lb/cu.ft.

Table 3.

Sieve Analysis of Coarse Aggregates

U. S. Std. Sieve No.	Percentages Passing by Weight 1/4-in Max	3/8-in Max	1/2-in Max
1/2"	--	--	100%
3/8"	--	100%	88.0
1/4"	100%	--	--
4	91.0	32.9	16.0
8	50.1	--	--
16	11.9	11.6	8.4
30	7.9	--	--
50	6.3	6.6	5.7
100	4.3	3.8	3.7
Dry rodded weight	106 lb/cu.ft.	97.8	95.1

Specific Gravity - 2.72

Table 4.

Average Slump of Concrete Mixes

Max. Agg.	Av.Slump In.
1/4"	0
3/8	1-1/4
1/2	2

Curing of all concrete was in air with the exception of Batch 3-A, which was cured in moist sand for three days. Several compression cylinders were moist-cured for other periods for reasons of comparison.

It is realized that concrete with slumps as low as those obtained in this work cannot be economically placed in practice. Workability can be increased by the use of admixtures.

Table 3.

Sieve Analysis of Coarse Aggregates

U. S. Std. Sieve No.	Percentages Passing by Weight		
	1/4-in Max	3/8-in Max	1/2-in Max
1/2"	--	--	100%
3/8"	--	100%	86.0
1/4"	100%	--	--
4	91.0	32.9	16.0
8	50.1	--	--
16	11.9	11.6	8.4
30	7.9	--	--
50	6.3	6.6	5.7
100	4.3	3.8	3.7

Dry rodded weight 106 lb/cu.ft. 97.8 95.1

Specific Gravity - 2.72

Table 4.

Average Slump of Concrete Mixes

Max. Agg.	Av.Slump In.
1/4"	0
3/8	1-1/4
1/2	2

Curing of all concrete was in air with the exception of Batch 3-A, which was cured in moist sand for three days. Several compression cylinders were moist-cured for other periods for reasons of comparison.

It is realised that concrete with slumps as low as those obtained in this work cannot be economically placed in practice. Workability can be increased by the use of admixtures.

Six standard 3x6-in cylinders were cast from each batch, except for batch No. 1 for which only three cylinders were cast. These cylinders were tested for compressive strength in accordance with ASTM Designation C 39-44. A summary of the average results of these tests is presented in Figure 2.

Six standard 3x6-in cylinders were cast from each batch, except for batch No. 1 for which only three cylinders were cast. These cylinders were tested for compressive strength in accordance with ASTM Designation C 39-44. A summary of the average results of these tests is presented in Figure 2.

Batch Number	Max. Size Aggregate	Curing Method	Time Days	Compressive Strength - Ksi (1 2 3 4 5 6 7 8)
1	½"	Air Cured	7	3940
1-A	½"	Moist sand for 3 days	7	5220
			17	7020
			31	7280
2	⅜"	Air Cured	8	3840
			22	4200
2-S	⅜"	Moist sand for 2 days	7	5005
			7	5030 (Neat Cement)
		Moist sand for 6 days	7	5500
3	¼"	Air Cured	7	4010
			21	4120

FIG. 2. SUMMARY OF CONCRETE TESTS

Specimen size: Std 3×6 test cylinders. Loading rate: 10,000 #/minute.

All specimens capped on one end only with plaster of paris, except as noted.

DESCRIPTION OF SPECIMENS

A total of 90 specimens were cast in batches of 18 using three reinforcing bars placed as indicated. (Figure 2).

Each "batch" cast employed either 1/2, 3/8, or 1/4-inch maximum size aggregate, the clear bar spacing and cover varying as a function of aggregate size. Thus a batch consisted of 9 1-in round bars with embedments of 12, 18, and 24 inches, and with three different covers for each embedment varying from 5/16" to 1", depending upon the size of aggregate employed; and 9 3/4-inch round bars with embedments of 9, 13-1/2, and 18 inches with the same cover as the 1-in bars. Six standard 3x6-inch compression cylinders were cast from each batch.

To accommodate the variables required per batch, forms were constructed by using a set size of base plate and side plates of 3/4" -5 ply plywood. End pieces were the controlling section of the form. These were accurately cut and drilled from 3/4" plywood to conform to the spacing and cover for the batch.

Forms were assembled by setting the end pieces on the base at the required spacing for embedment, placing the side pieces and wedging them solidly to the end pieces by means of wooden wedges. (Figures 3-A and-B). Forms were oiled prior to placing the steel.

Loose mill scale was removed from the reinforcing bars and a short section wrapped with rubber tape in order to secure a snug fit in the holes in the forms.

The forms thus assembled were easily stripped and possessed the advantage of being adjustable to any size of specimen.

The concrete was hand placed in layers and well rodded to insure dense specimens free from "honeycombing" and air pockets.

DESCRIPTION OF SPECIMENS

A total of 90 specimens were cast in batches of 18 using three reinforcing bars placed as indicated. (Figure 2).

Each "batch" cast employed either 1/2, 5/8, or 1/4-inch maximum size aggregate, the clear bar spacing and cover varying as a function of aggregate size. Thus a batch consisted of 9 1-in round bars with embedments of 12, 18, and 24 inches, and with three different covers for each embedment varying from 5/16" to 1", depending upon the size of aggregate employed; and 9 3/4-inch round bars with embedments of 9, 13-1/2, and 18 inches with the same cover as the 1-in bars. Six standard 3x6-inch compression cylinders were cast from each batch.

To accommodate the variables required per batch, forms were constructed by using a set size of base plate and side plates of 3/4" -5 ply plywood. End pieces were the controlling section of the form. These were accurately cut and drilled from 3/4" plywood to conform to the spacing and cover for the batch.

Forms were assembled by setting the end pieces on the base at the required spacing for embedment, placing the side pieces and wedging them solidly to the end pieces by means of wooden wedges. (Figures 3-A and-B). Forms were oiled prior to placing the steel.

Loose mill scale was removed from the reinforcing bars and a short section wrapped with rubber tape to insert to secure a snug fit in the holes in the forms.

The forms thus assembled were easily stripped and possessed the advantage of being adjusted to any size of specimen.

The concrete was hand placed in layers and well rodded to insure dense specimens free from "honeycombing" and air pockets.

The top was screeded off to the height of the end forms, and the form vibrated from one to three minutes until a water sheen appeared on the surface.

The top was screeded off to the height of the end forms, and the form vibrated from one to three minutes until a water sheen appeared on the surface.

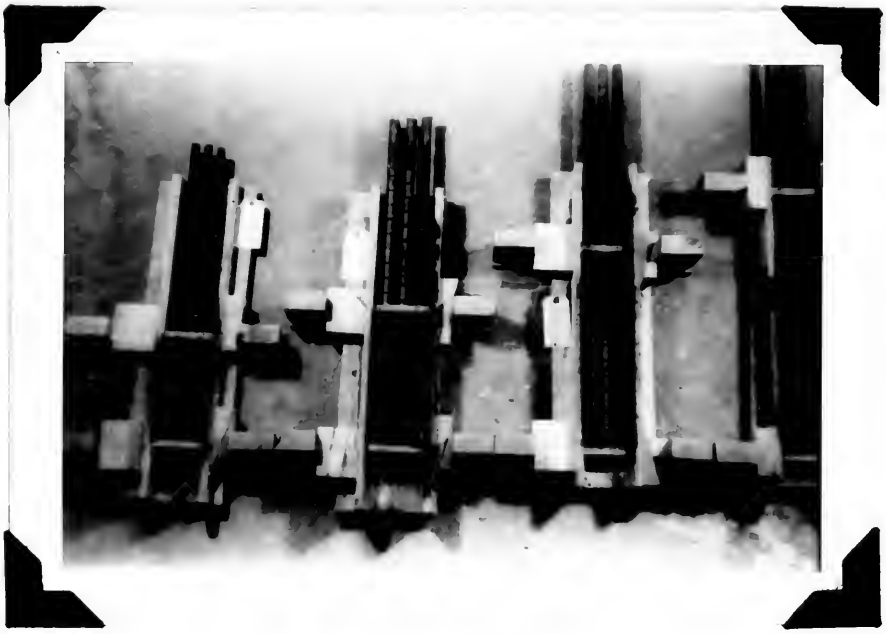

Figure No. 3-A.

Type of form used for all specimens showing placement of reinforcing bars. End blocks control the cover and clear bar spacing. Note wedges that take side pieces up solid.

Figure No. 3-A.

Type of form used for all specimens showing placement of reinforcing bars. End blocks control the cover and clear bar spacing. Note wedges that take side pieces up solid.

Figure 3-B.

Forms ready for placing concrete. A "batch" consisted of 18 specimens and 6 3x6-inch compression cylinders.

Figure 2-B.

Forms ready for placing concrete. A "batch" consisted of 18 specimens and 6 3x6-inch compression cylinders.

The vibrator consisted of a spring-mounted table with a device for clamping down the form. This table was vibrated by a 1/2 H.P. motor which was connected to the table by an eccentric. This arrangement was used to vibrate all specimens, the weight varying from 8 to 70 lbs. (See Figure 4).

Forms were stripped at the end of 24 hours. (Figure 3-C). The specimens were cured for seven days before testing. Batch 3-A was cured for 3 days in moist sand; all other batches were air cured at 55-65F, no attempt being made to control the moisture. This was done in an attempt to approach the field conditions of curing precast concrete.

Table 5.

SPECIMENS CAST

Batch	7-day comp. strength-psi	Bars	Embedment in.	Clear Spacing & Cover in.	No. of Specs.
1	3940	1"Ød	12,18,24	1,3/4,5/8	9
		3/4"Ød	9,13½,18		9
					18
1-A	5220	do	do	do	18
2	3840	do	do	3/4,9/16,15/32	18
3	4010	do	do	5/16,3/8,1/2	18
2-S	5005	1"Øp	do	11/16,1/2,13/32	9
		3/4"Øp	do	3/4,9/16,15/16	9
					18
				Total	90

The vibrator consisted of a spring-mounted table with a device for clamping down the form. This table was vibrated by a 1/2 H.P. motor which was connected to the table by an eccentric. This arrangement was used to vibrate all specimens, the weight varying from 8 to 70 lbs. (See Figure 4).

Forms were stripped at the end of 24 hours. (Figure 3-C). The specimens were cured for seven days before testing. Batch 3-A was cured for 3 days in moist sand; all other batches were air cured at 55-65°F, no attempt being made to control the moisture. This was done in an attempt to approach the field conditions of curing precast concrete.

Table 2.

SPECIMENS CAST

Batch	7-day comp. strength-psi	Date	Embedment in.	Clear Spacing & Cover in.	No. of Specs.
I	7940	1"@d 3/4"@d	12, 18, 24 9, 13½, 18	1, 3/4, 3/8	9 9 18
I-A	8220	do	do	do	18
2	3840	do	do	3/4, 9/16, 15/32	18
3	4010	do	do	5/16, 3/8, 1/2	18
2-S	5005	1"@p 3/4"@p	do do	11/16, 1 1/2, 13/32 3/4, 9/16, 15/16	9 9 18
			Total		90

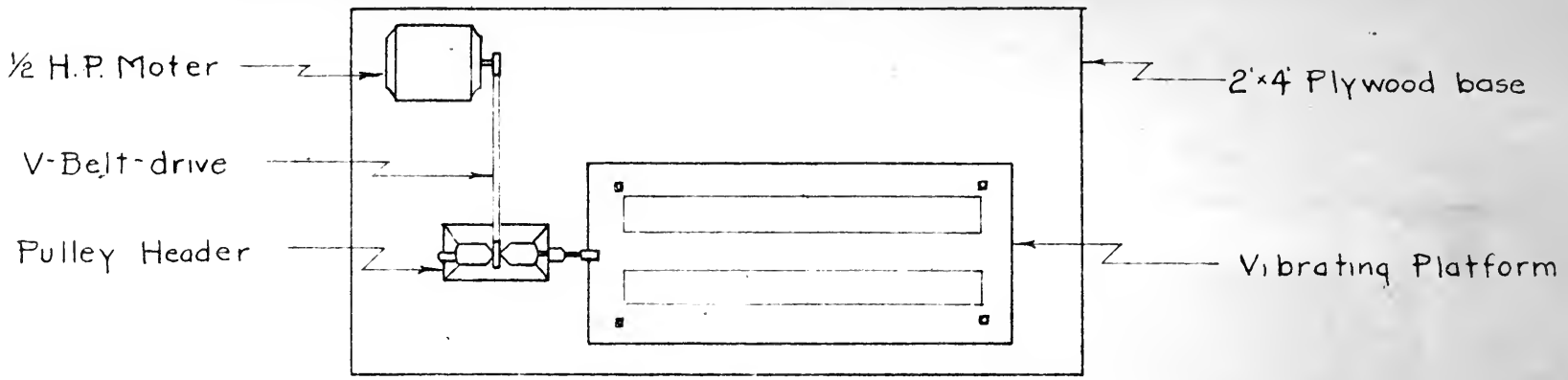

PLAN

Scale 1"=1'0"

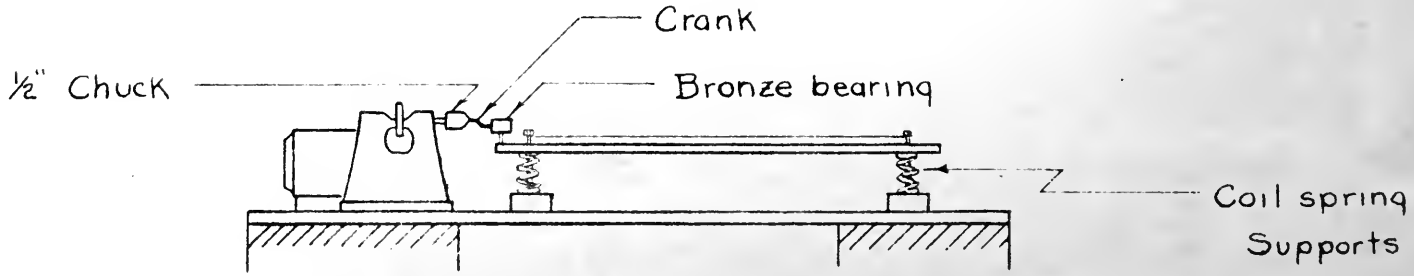

ELEVATION

FIG. 4. SKETCH OF VIBRATOR

Figure No. 3-C.

A "batch" prior to welding the lugs on the ends of the reinforcing bars.

Figure No. 3-C.

A "beton" prior to welding the lugs on the ends of the reinforcing bars.

DESCRPTION OF TESTING APPARATUS

TESTING YOKES

The testing of 3-bar specimens required apparatus particularly adapted to the purpose. This consisted of two rectangular yokes similar in detail except for the length of vertical members. All crossheads were of two 1x5x1'-6" cold rolled steel separated by the vertical members, two 5/8 x 4-in. bars with a 1/4-in spacer between. Each joint was pin-connected with a 1-1/2-in bolt.

Each of the two yokes was secured to its respective crosshead in the testing machine by a 2-1/2x1'-5" bolt, the shank milled on two sides to 1-7/16-in thickness to permit fitting between the bars of the yoke crosshead. (See Figures Nos. 5 and 6).

Design load, based on a maximum possible resistance of specimens, was 100,000 lb. Design deflection for the crossheads was a practical minimum.

DESCRIPTION OF TESTING APPARATUS

TESTING YOKES

The testing of 3-bar specimens required apparatus particularly adapted to the purpose. This consisted of two rectangular yokes similar in detail except for the length of vertical members. All crossheads were of two 1x5x1'-6" cold rolled steel separated by the vertical members, two 5/8 x 4-in. bars with a 1/4-in spacer between. Each joint was pin-connected with a 1-1/2-in bolt.

Each of the two yokes was secured to its respective crosshead in the testing machine by a 2-1/2x1'-5" bolt, the shank milled on two sides to 1-7/16-in thickness to permit fitting between the bars of the yoke crossheads. (See Figures Nos. 5 and 6).

Design load, based on a maximum possible resistance of specimens, was 100,000 lb. Design deflection for the crossheads was a practical minimum.

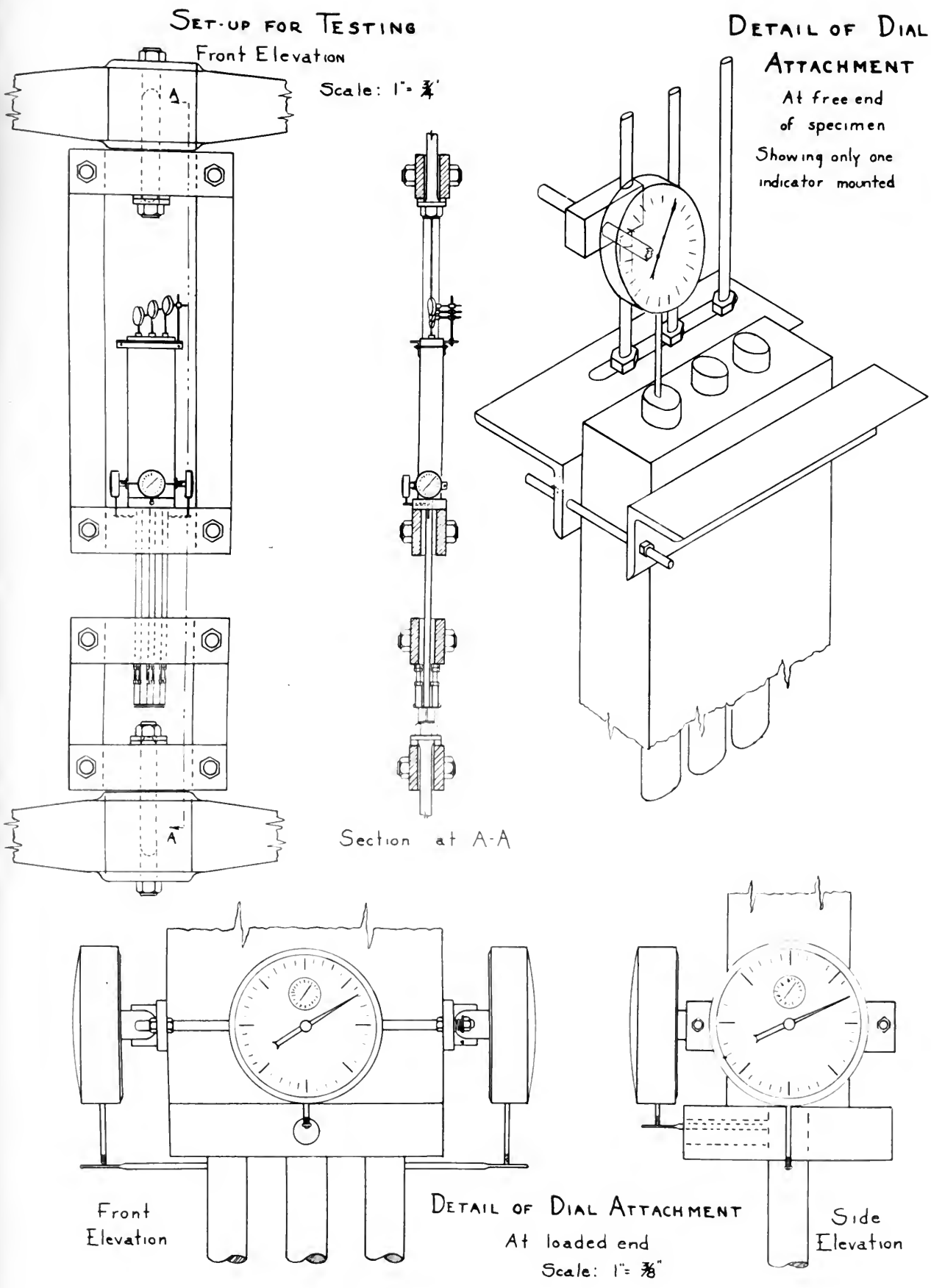

FIG. 5 TESTING RIG

YOKE WITH DETAILS OF DIAL INDICATOR ARRANGEMENT AND ATTACHMENT

BEARING PLATES

Steel bearing plates of 1x3-in stock were used to transmit the load from the base of the specimen to the crosshead of the upper yoke. To accommodate the variable clear bar spacing and the casting schedule, fabrication of fifty-four bearing plates was required.

Bearing plates were all drilled with 7/16-in holes to accommodate the final arrangement for slip measurement at the loaded end. Those 5-1/2-in long and less were drilled from the edge to the center hole; those over 5-1/2-in long, because of clearance restrictions between the edge of the specimen and the vertical members of the yoke, required two additional holes on the opposite side, drilled to the end holes.

Table 6.

BEARING PLATE SCHEDULE

No.Req'd.	Pl.No.	L"	C"		D"
3	1	4.0	1-1/16	1.0625	7/8"
3	2	4.0	1-1/8	1.125	7/8"
3	3	4.5	1-1/4	1.250	1"
3	4	4.5	1-7/32	1.21875	1"
3	5	4.5	1-5/16	1.3125	1"
3	6	4.5	1-5/16	1.3125	1-1/4"
3	7	4.5	1-3/8	1.375	1-1/4"
3	8	5.0	1-3/8	1.375	1"
3	9	5.0	1-1/2	1.50	1-1/4"
3	10	5.0	1-15/32	1.46875	1-1/4"
6	11	5.5	1-1/2	1.50	1"
3	12	5.5	1-9/16	1.5625	1-1/4"

BEARING PLATES

Steel bearing plates of 1x3-in stock were used to transmit the load from the base of the specimen to the crosshead of the upper yoke. To accommodate the variable clear bar spacing and the casting schedule, fabrication of fifty-four bearing plates was required.

Bearing plates were all drilled with 7/16-in holes to accommodate the final arrangement for slip measurement at the loaded end. Those 5-1/2-in long and less were drilled from the edge to the center hole; those over 5-1/2-in long, because of clearance restrictions between the edge of the specimen and the vertical members of the yoke, required two additional holes on the opposite side, drilled to the end holes.

Table 6.

BEARING PLATE SCHEDULE

No. Sec'd.	Pl. No.	L"	Q"	Q"
3	1	4.0	1-1/16 1.0625	7/8"
3	2	4.0	1-1/8 1.125	7/8"
3	3	4.5	1-1/4 1.250	1"
3	4	4.5	1-7/32 1.21875	1"
3	5	4.5	1-5/16 1.3125	1"
3	6	4.5	1-5/16 1.3125	1-1/4"
3	7	4.5	1-3/8 1.375	1-1/4"
3	8	5.0	1-3/8 1.375	1"
3	9	5.0	1-1/2 1.50	1-1/4"
3	10	5.0	1-19/32 1.46875	1-1/4"
6	11	5.5	1-1/2 1.50	1"
3	12	5.5	1-9/16 1.5625	1-1/4"

Table 6. (Continued)

BEARING PLATE SCHEDULE

No.Req'd.	Pl.No.	L"	C"		D"
3	13	5.5	1-5/8	1.625	1-1/4"
6	14	6.0	1-3/4	1.75	1-1/4"
3	15	7.0	1-3/4	1.75	1"
3	16	7.0	2	2.00	1-1/4"

L = Length

C = Ctr. to Ctr. bar spacing

D = Diameter of drilled hole

DIAL ARRANGEMENT AND ATTACHMENT

Illustrations of the method used for measuring slip at the loaded and free ends are shown in Figures Nos. 5 and 6 and described under "Testing Procedure".

Table 6. (Continued)

BEARING PLATE SCHEDULE

No.Req'd.	Pl.No.	L"	C"	D"
3	13	5.5	1-5/8	1.625	1-1/4"
6	14	6.0	1-3/4	1.75	1-1/4"
3	15	7.0	1-3/4	1.75	1"
3	16	7.0	2	2.00	1-1/4"

L = Length

C = Ctr.to Ctr.bar spacing

D = Diameter of drilled hole

DIAL ARRANGEMENT AND ATTACHMENT

Illustrations of the method used for measuring slip at the loaded and free ends are shown in Figures Nos. 5 and 6 and described under "Testing Procedure".

Figure No. 6.

The arrangement of the testing yokes with a 24 inch embedment specimen, and the dial arrangement. Dial rigging is constructed so that it is adjustable to any size specimen.

The 1-inch bearing plate rides on the upper yoke. The pull is transmitted through the bolt columns to the welded lugs on the ends of the reinforcing bars. Yokes were bolted to the crossheads of the testing machine.

The testing rig was left mounted in the testing machine throughout the experiment. Specimens were mounted by removing the crosshead members from the upper and lower yokes.

Figure No. 6.

The arrangement of the testing yokes with a 24 inch embedment specimen, and the dial arrangement. Dial rigging is constructed so that it is adjustable to any size specimen.

The 1-inch bearing plate rides on the upper yoke. The pull is transmitted through the bolt columns to the welded lugs on the ends of the reinforcing bars. Yokes were bolted to the crossheads of the testing machine.

The testing rig was left mounted in the testing machine throughout the experiment. Specimens were removed by removing the crosshead members from the upper and lower yokes.

PREPARATION OF SPECIMENS FOR TEST

The specimens, after curing 5 days, were prepared as required for the testing procedure adopted.

Bearing plates were slipped onto the reinforcing bars. Three-inch lengths of 3/4-in round bars were welded, two per reinforcing bar, to the loading-end in positions such that three of these "lugs" projected on each side of the plane of reinforcing bars. The "upper" ends of these lugs were machined prior to placing and in welding them on, all six faces were maintained as nearly as possible in a plane perpendicular to the specimen axis.

It was found necessary to weld light steel rods across the three lugs on each side to prevent any tendency of the loaded bar ends to move with respect to each other during loading.

With the base plate snug against the concrete, short 5/32-in rods were spot welded to the reinforcing bars at right angles through the holes in the base plates. On specimens 5-1/2-in and less the rods were welded on just below the bearing plate and at right angles to the center rod. (Figure 5).

These rods were flat and smooth on the free end and oriented with the flat sides parallel to the bearing plate. It was on these surfaces that the tips of the dial gages rested during testing.

The bearing end of the concrete was not capped because the plywood forms left a very flat and smooth surface which was perpendicular to the axis of the reinforcing bars.

PREPARATION OF SPECIMENS FOR TEST

The specimens, after curing 5 days, were prepared as required for the testing procedure adopted.

Bearing plates were slipped onto the reinforcing bars. Three-inch lengths of 3/4-in round bars were welded, two per reinforcing bar, to the loading-end in positions such that three of these "lugs" projected on each side of the plane of reinforcing bars. The "upper" ends of these lugs were machined prior to placing and in welding them on, all six faces were maintained as nearly as possible in a plane perpendicular to the specimen axis.

It was found necessary to weld light steel rods across the three lugs on each side to prevent any tendency of the loaded bar ends to move with respect to each other during loading.

With the base plate snug against the concrete, about 3/32-in rods were spot welded to the reinforcing bars at right angles through the holes in the base plates. On specimens 5-1/2-in and less the rods were welded on just below the bearing plate and at right angles to the center rod. (Figure 3).

These rods were flat and smooth on the free end and oriented with the flat sides parallel to the bearing plate. It was on these surfaces that the tips of the dial gages rested during testing.

The bearing end of the concrete was not capped because the plywood forms left a very flat and smooth surface which was perpendicular to the axis of the reinforcing bars.

TESTING PROCEDURE

The specimens were tested in a 100,000 lb capacity fluid support Southwark-Emery testing machine, and the load was applied at the rate of about 10,000 lb/min., the machine being stopped to read the dial gages. The specimen was seated on a 1-in bearing block with holes of 1/4-in greater diameter than the steel bars bored to the individual spacing of the specimen. Such economy was required to obtain a maximum area of concrete in compression. The base plates were supported by the lower crosshead of the upper yoke.

Slips of the bars were measured by 1/10,000-in Federal dial gages on the unloaded end, and by 1/1,000 dial gages on the loaded end. Readings of the lower dials were estimated to 2/10,000 inch.

At the unloaded end the dials were mounted on brackets adjustable horizontally, radially, and vertically, the support being two angles firmly clamped to the upper end of the concrete by two spring-loaded bolts. (Figure No. 5). To obtain clearance between dials, a 1-in tip extension was employed on the center dial.

The very limited space for placing dials due to the height limitations of the testing machine and the very close spacing of the bars led to several different dial arrangements at the loaded end. First the dials were mounted on the bars by brackets, the tips resting on a flat horizontal bar supported by the lower end of the concrete. (Figures Nos. 6 and 7.). This arrangement proved to be unsatisfactory.

TESTING PROCEDURE

The specimens were tested in a 100,000 lb capacity fluid support Southwark-Emery testing machine, and the load was applied at the rate of about 10,000 lb/min., the machine being stopped to read the dial gages. The specimen was seated on a 1-in bearing block with holes of 1/4-in greater diameter than the steel bars bored to allow individual spacing of the specimen. Such economy was required to obtain a maximum area of concrete in compression. The base plates were supported by the lower crosshead of the upper yoke.

Slips of the bars were measured by 1/10,000-in Federal dial gages on the unloaded end, and by 1/1,000 dial gages on the loaded end. Readings of the lower dials were estimated to 2/10,000 inch.

At the unloaded end the dials were mounted on brackets adjustable horizontally, radially, and vertically, the support being two angles firmly clamped to the upper one of the concrete by two spring-loaded bolts. (Figure No. 5). To obtain clearance between dials, a 1-in tip extension was employed on the center dial.

The very limited space for locating dials due to the height limitations of the testing machine and the very close spacing of the bars led to several different dial arrangements at the loaded end. First the dials were mounted on the bars by brackets, the tips resting on a flat horizontal bar supported by the lower end of the concrete. (Figures Nos. 6 and 7.). This arrangement proved to be unsatisfactory.

A second arrangement (Figure No. 5), placed the dials on a bracket mounted on the lower end of the concrete about 2-in above the compression face, the tips resting on the projecting rods which are described under "Preparation of Specimen for Test".

When of significant magnitude, the slip at the loaded end as read on the dial gages was corrected for elongation of the projecting steel. Slip at the free end was read directly from the dial gages.

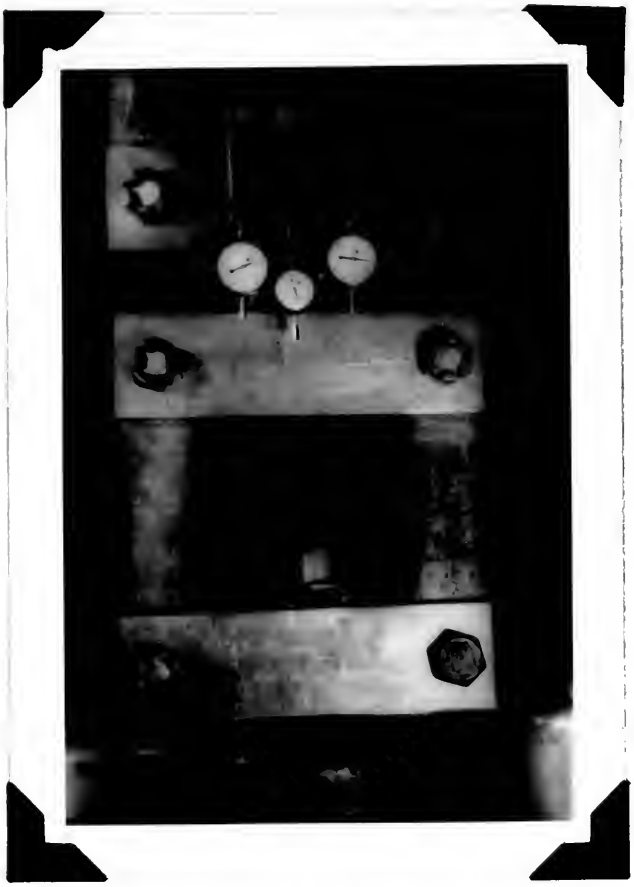

Figure No. 7.

The lower yoke showing initial dial arrangement for measuring slip at the loaded end. Dials were clamped to reinforcing bars and registered movement at the lower end of the concrete through the extension. This method was changed to a more satisfactory arrangement by drilling holes in the bearing plate and welding "tips" to the reinforcing bar. Dials clamped to the concrete rode on the "tips" thus measuring the motion directly at the base of the specimen.

Figure No. 7.

The lower yoke showing initial dial arrangement for measuring slip at the loaded end. Bolts were clamped to reinforcing bars and registered movement at the lower end of the concrete through the extension. This method was changed to a more satisfactory arrangement by drilling holes in the bearing plate and welding "tips" to the reinforcing bar. Bolts clamped to the concrete rods on the "tips" thus measuring the motion directly at the base of the specimen.

Initial dial-gage readings were taken at a machine load of 2,000 lb., then at 5,000 lb., and readings at increments of 2500 lbs. were taken until failure. All dial gages were left in place until failure.

The problem of producing equal motion in the loaded ends of the three bars was solved by the use of the lugs as described in "Preparation of Specimens for Test". Load was applied to the bars through short columns in the form of six 5/8x1-1/4-in tap screws with double nuts, the head of each tap screw bearing on the machined surface of a lug and the nut bearing on the lower face of the upper crosshead of the lower yoke. (Figure No. 5).

In placing the tap screws, minimum clearance was used to make the nuts take the load and all nuts were taken up finger-tight. The machine was loaded to 2,000 lb. by hand and all dials placed.

As a check on the equality of loading obtained in the three bars, Porter-Lipp strain gages were placed on the bars in a number of tests.

Initial dial-gage readings were taken at a machine load of 2,000 lb., then at 5,000 lb., and readings at increments of 2500 lbs. were taken until failure. All dial gages were left in place until failure.

The problem of producing equal motion in the loaded ends of the three bars was solved by the use of the lugs as described in "Preparation of Specimens for Test". Load was applied to the bars through short columns in the form of six 5/8-in top screws with double nuts, the head of each top screw bearing on the machined surface of a lug and the nut bearing on the lower face of the upper crosshead of the lower yoke. (Figure No. 5).

In placing the top screws, minimum clearance was used to make the nuts take the load and all nuts were taken up tighter. The machine was loaded to 5,000 lb. by hand and all dials placed.

As a check on the quality of loading obtained in the three bars, Porter-Lipp strain gages were used on the bars in a number of tests.

RESULTS AND DISCUSSIONS

Tests in all cases were continued until failure of the specimen occurred, either by splitting of the concrete, by compression failure of the concrete, or by the bar pulling through.

All smooth bar specimens failed by pulling through, but all specimens with 5/16 and 13/32-in cover developed longitudinal cracks on a plane through the plane of the bars, extending upward from the compression face.

The typical splitting (100%) of the deformed bar specimens was primarily in a plane through the smooth sides of the bars. Secondary splitting was at right angles. In specimens with the thinner cover and spacing, splitting was in a plane through the plane of the three bars, position of the lugs not withstanding. Compression failure occurred in 6 specimens with covers of 9/16-in and less, 24 diameter embedment. Failure was conical, extending from the outer edges of the compression face inward and upward at an angle of about 30 degrees with the bars.

RESULTS AND DISCUSSIONS

Tests in all cases were continued until failure of the specimen occurred, either by splitting of the concrete, by compression failure of the concrete, or by the bar pulling through.

All smooth bar specimens failed by pulling through, but all specimens with 5/16 and 15/32-in cover developed longitudinal cracks on a plane through the plane of the bars, extending upward from the compression face.

The typical splitting (100%) of the deformed bar specimens was primarily in a plane through the smooth sides of the bars. Secondary splitting was at right angles. In specimens with the thinner cover and spacing, splitting was in a plane through the plane of the three bars, position of the lugs not withstanding. Compression failure occurred in 6 specimens with covers of 9/16-in and less, 24 diameter embedment. Failure was conical, extending from the outer edges of the compression face inward and upward at an angle of about 30 degrees with the bars.

TABLE NO. 7.

RESULTS OF 3/4 INCH ROUND DEFORMED BARS

SPECIMEN NUMBER	BATCH NO.	COMPRESS. STR.PSI	EMBED. IN.	SPAC.& COVER	FIRST SLIP	ULTI-MATE	AVE. BOND
109	3	4010	9	5/16	5900	5900	93
110(a)*	3	4010	9	3/8	P.F.*	7000	110
111(b)	3	4010	9	1/2	P.F.*	17200	270
115	2	3840	9	15/32	None	13200	208
116	2	3840	9	9/16	18500	18500	291
117(d)	2	3840	9	3/4	None	27000	424
121	1	3940	9	5/8	17500	18000	283
122	1	3940	9	3/4	21400	24100	379
121A(c)	1A	5220	9	5/8	18900	21000	330
122A(d)	1A	5220	9	3/4	22000	22800	358
123A	1A	5220	9	1	38800	40000	629
127	3	4010	13½	5/16	P.F.	9900	104
129(b)	3	4010	13½	1/2	None	19000	200
133	2	3840	13½	15/32	19000	19800	208
134	2	3840	13½	9/16	16000	20000	210
135(d)	2	3840	13½	3/4	At.Ult.	25000	262
141	1	3940	13½	1	41000	41400	434
139A(c)	1A	5220	13½	5/8	21000	22000	232
140A	1A	5220	13½	3/4	26300	27100	285
141A	1A	5220	13½	1	53500	54200	569
145	3	4010	18	5/16	Comp.*	11600	91
146(a)	3	4010	18	3/8	Comp.*	14500	114
147(b)	3	4010	18	1/2	None	22500	177

TABLE NO. 7.

RESULTS OF 3/4 INCH ROUND DEFORMED BARS

SPECIMEN NUMBER	BATCH NO.	COMPRESS. STR.PSI	EMBED. IN.	SPAC.& COVER	FIRST SLIP	ULTI-MATE	AVE. BOND
109	3	4010	9	5/16	5000	5900	93
110(a)*	3	4010	9	3/8	P.F.*	7000	110
111(b)	3	4010	9	1/2	P.F.*	17200	270
115	2	3840	9	15/32	None	13200	208
116	2	3840	9	9/16	18500	18500	291
117(d)	2	3840	9	3/4	None	27000	424
121	1	3940	9	5/8	17500	18000	283
122	1	3940	9	3/4	21400	24100	379
121A(c)	1A	5220	9	5/8	18000	21000	330
122A(d)	1A	5220	9	3/4	22000	22800	358
123A	1A	5220	9	1	38800	40000	629
127	3	4010	13½	5/16	P.F.	9900	104
129(b)	3	4010	13½	1/2	None	19000	200
133	2	3840	13½	15/32	19000	19500	208
134	2	3840	13½	9/16	16000	20000	210
135(d)	2	3840	13½	3/4	At.Jit.	25000	262
141	1	3940	13½	1	41000	41400	434
139A(c)	1A	5220	13½	5/8	21000	22000	232
140A	1A	5220	13½	3/4	26500	27100	285
141A	1A	5220	13½	1	53500	54200	569
145	3	4010	18	5/16	Comp.*	11500	91
146(a)	3	4010	18	5/8	Comp.*	14500	114
147(b)	3	4010	18	1/2	None	24500	177

TABLE NO. 7.(cont'd)

RESULTS OF 3/4 INCH ROUND DEFORMED BARS

SPECIMEN NUMBER	BATCH NO.	COMPRESS. STR.PSI	EMBED. IN.	SPAC.& COVER	FIRST SLIP	ULTI-MATE	AVE. BOND
151	2	3840	18	15/32	18500	18650	147
152	2	3840	18	9/16	23800	24500	193
153(d)	2	3840	18	3/4	None	39700	312
157	1	3940	18	5/8	P.F.	34200	269
158(d)	1	3940	18	3/4	36400	36400	286
159	1	3940	18	1	45000	46900	369
157A(c)	1A	5220	18	5/8	28100	28600	225
158A	1A	5220	18	3/4	37500	38200	301
159A	1A	5220	18	1	58800	62600	494

*

(a) - Averaged in plotting Figure 12- 3/8" cover.
(b) - Averaged in plotting Figure 12- 1/2" cover.
(c) - Averaged in plotting Figure 12- 5/8" cover.
(d) - Averaged in plotting Figure 12- 3/4" cover.

*

P.F. - Slip just prior to failure.

*

Comp. - Compression failure at base of specimen.

Ultimate load and loads at first slip are in pounds; average bond in pounds per square inch.

TABLE NO. 7.(cont'd)

RESULTS OF 3/4 INCH ROUND BURNED BARS

SPECIMEN NUMBER	BATCH NO.	COMPRESS. STR.PSI	BURNED IN.	SPEC.% COVER	FIRST BEND	ULTI-MATE	AVE. BOND
151	2	3640	18	15/16	1850	1895	147
152	2	3940	18	9/16	none	2300	195
153(d)	2	3840	18	3/4	none	3700	312
157	1	3940	18	5/8	F.F.	3400	269
158(d)	1	3840	18	3/4	3000	3400	286
159	1	3940	18	1	4500	4050	359
157A(c)	1A	3820	18	5/8	2600	2400	253
158A	1A	3820	18	3/4	4500	3800	321
159A	1A	3820	18	1	5800	4850	494

*

(a) - Averaged in testing figure 18- 3/8" cover.
(b) - Averaged in testing figure 18- 1/2" cover.
(c) - Averaged in testing figure 18- 5/8" cover.
(d) - Averaged in testing figure 18- 3/4" cover.

*

F.F. - Slip just prior to failure.

*

Comp. - Compression failure at bend in specimen.

Ultimate load and bond at first slip in pounds;

average bond in pounds per square inch.

TABLE NO. 8.

RESULTS OF 1 INCH ROUND DEFORMED BARS

SPECIMEN NUMBER	BATCH NO.	COMP. STR.PSI	EMBED. IN.	SPACE & COVER	FIRST SLIP	ULTI-MATE	AVE. BOND
112	3	4010	12	5/16	None	13000	110
114(b)	3	4010	12	1/2	24000	24000	203
118	2	3840	12	15/32	P.F.	18600	157
119	2	3840	12	9/16	P.F.	26400	223
120(d)	2	3840	12	3/4	P.F.	35000	296
124A	1A	5220	12	5/8	27000	29150	246
125A(d)	1A	5220	12	3/4	37500	40200	340
126A	1A	5220	12	1	P.F.	51400	434
130	3	4010	18	5/16	Comp.	16400	92.5
131	3	4010	18	3/8	None	15200	85
132(b)	3	4010	18	1/2	None	26000	146
137	2	3840	18	9/16	None	29600	167
138(d)	2	3840	18	3/4	39000	40000	225
142	1	3940	18	5/8	None	37650	212
143	1	3940	18	3/4	P.F.	46400	262
144	1	3940	18	1	60000	62800	353
142A(c)	1A	5220	18	5/8	P.F.	36400	205
143A(d)	1A	5220	18	3/4	41000	42000	236
144A	1A	5220	18	1	None	57100	322
148	3	4010	24	5/16	Comp.	15000	63.5
149(a)	3	4010	24	3/8	Comp.	22600	95.5
150(b)	3	4010	24	1/2	None	29800	126
154	2	3840	24	15/32	Comp.	26900	114
155	2	3840	24	9/16	Comp.	32000	135
156	2	3840	24	3/4	P.F.	47500	200
160(c)	1	3940	24	5/8	None	38200	161

TABLE NO. 8.

RESULTS OF 1 INCH ROUND SEFORMED BARS

SPECIMEN NUMBER	BATCH NO.	COMP. STR. PSI	EMBED. IN.	SPACE & COVER	FIRST SLIP	ULTI-MAIN	AVE. BOND
112	3	4010	12	5/16	None	13000	110
114(b)	3	4010	12	1/2	14000	24000	203
118	2	3840	12	15/32	P.F.	18600	157
119	2	3840	12	9/16	P.F.	26400	223
120(d)	2	3840	12	3/4	P.F.	35000	296
124A	1A	5220	12	5/8	27000	29150	246
125A(d)	1A	5220	12	3/4	37500	40200	340
126A	1A	5220	12	1	P.F.	51400	434
130	3	4010	18	5/16	Comp.	16400	92.5
131	3	4010	18	3/8	None	15200	85
132(b)	3	4010	18	1/2	None	26000	146
137	2	3840	18	5/16	None	19600	167
138(d)	2	3840	18	3/4	39000	40000	225
142	1	3940	18	5/8	None	37650	212
143	1	3940	18	3/4	P.F.	40400	262
144	1	3940	18	1	60000	62000	353
142A(b)	1A	5220	18	5/8	P.F.	36400	205
143A(d)	1A	5220	18	3/4	41000	42000	236
144A	1A	5220	18	1	None	57100	322
148	3	4010	24	5/16	Comp.	15000	63.5
149(a)	3	4010	24	3/8	Comp.	22600	95.5
150(b)	3	4010	24	1/2	None	29800	126
154	2	3840	24	15/32	Comp.	26900	114
155	2	3840	24	5/16	Comp.	32000	135
156	2	3840	24	3/4	P.F.	47500	200
160(a)	1	3940	24	5/8	None	38200	161

TABLE NO. 8. (cont'd)

RESULTS OF 1 INCH ROUND DEFORMED BARS

SPECIMEN NUMBER	BATCH NO.	COMP. STR.PSI	EMBED. IN.	SPACE & COVER	FIRST SLIP	ULTI-MATE	AVE. BOND
161(d)	1	3940	24	3/4	45000	47600	201
162	1	3940	24	1	None	80100	338
160A(c)	1A	5220	24	5/8	P.F.	48200	203
161A	1A	5220	24	3/4	None	49500	279
162A	1A	5220	24	1	None	84100	355

TABLE NO. 3. (cont'd)

RESULTS OF 1 INCH ROUND PERFORMED BARS

SPECIMEN NUMBER	BATCH NO.	COMP. STR. PSI	EMBED. IN.	SPACE & COVER	MIXT SIZ	ULTI- MATE	AVE. BOND
16I(d)	I	3940	24	3/4	45000	47500	201
16I	I	3940	24	I	None	80100	338
16OA(e)	IA	5220	24	5/8	P.F.	48200	203
16IA	IA	5220	24	3/4	None	49500	279
16IA	IA	5220	24	I	None	84100	355

TABLE NO. 9.

RESULTS OF PLAIN BAR TESTS

SPECIMEN & SIZE BAR	BATCH NO.	COMP. STR.PSI	EMB. IN.	SPACE COVER	FIRST SLIP	ULTI-MATE	AVE. BOND
115S-3/4	2S	5005	9	15/32	12000	12100	190
116S-3/4	2S	5005	9	9/16	10900	11000	173
117S-3/4	2S	5005	9	3/4	7300	7300	116
133S-3/4	2S	5005	13½	15/32	15000	15000	157.5
134S-3/4	2S	5005	13½	9/16	18900	19800	208
135S-3/4	2S	5005	13½	3/4	21300	21600	217
151S-3/4	2S	5005	18	15/32	18100	18100	141.5
152S-3/4	2S	5005	18	9/16	23100	24800	195
153S-3/4	2S	5005	18	3/4	37500	38900	306*
119S-1	2S	5005	12	1/2	17200	17350	144
120S-1	2S	5005	12	11/16	16500	17000	141
136S-1	2S	5005	18	13/32	12000	12000	66.5
137S-1	2S	5005	18	1/2	21700	21800	121
138S-1	2S	5005	18	11/16	27500	29000	161
154S-1	2S	5005	24	13/32	17700	17700	73.6
155S-1	2S	5005	24	1/2	25000	25000	104
156S-1	2S	5005	24	11/16	36500	37600	156

* - Very rusty bars.

TABLE NO. 9.

RESULTS OF PLAIN BAR TESTS

SPECIMEN & SIZE BAR	BATCH NO.	COMP. STR.PSI	EMB. IN.	SPACE COVER	FIRST SLIP	ULTI-MATE	AVG. BOND
115S-3/4	2S	5005	9	15/32	12000	12100	190
116S-3/4	2S	5005	9	9/16	10900	11000	173
117S-3/4	2S	5005	9	3/4	7300	7300	116
133S-3/4	2S	5005	13½	15/32	15000	15000	157.5
134S-3/4	2S	5005	13½	9/16	18900	19800	208
135S-3/4	2S	5005	13½	3/4	21300	21600	217
151S-3/4	2S	5005	18	15/32	18100	18100	141.5
152S-3/4	2S	5005	18	9/16	23100	24800	195
153S-3/4	2S	5005	18	3/4	37500	38900	306*
119S-1	2S	5005	12	1/2	17200	17350	144
120S-1	2S	5005	12	11/16	16500	17000	141
136S-1	2S	5005	18	13/32	12000	12000	66.5
137S-1	2S	5005	18	1/2	21700	21800	121
138S-1	2S	5005	18	11/16	27500	29000	161
154S-1	2S	5005	24	13/32	17700	17700	73.6
155S-1	2S	5005	24	1/2	25000	25000	104
156S-1	2S	5005	24	11/16	36500	37600	156

* - Very rusty bars.

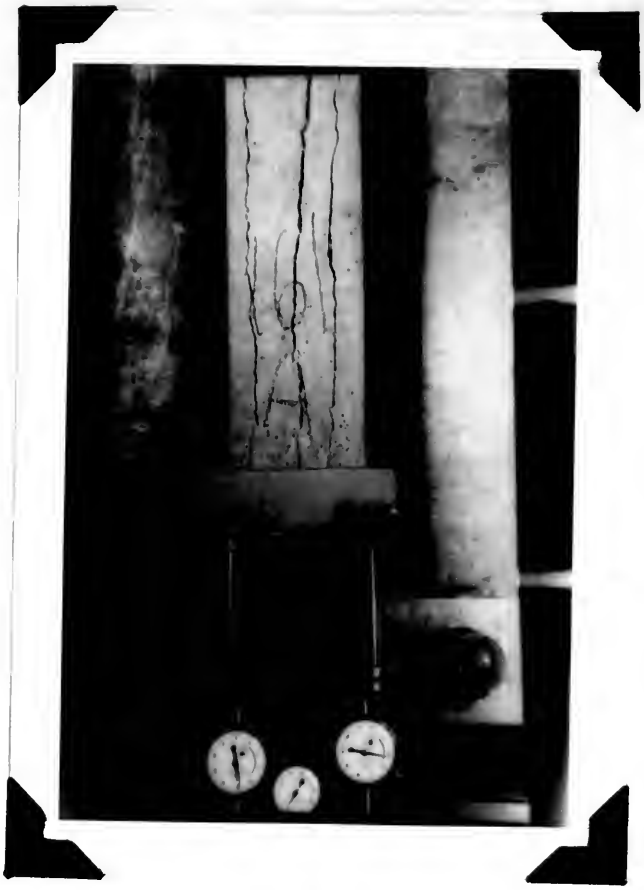

Figure No. 8.

Upper yoke with specimen showing a typical failure. The specimen is a three-bar 1"Ø with 24" embedment and 3/4" spacing and cover.

Plate No. 8.

Upper yoke with specimen showing a typical failure.

The specimen is a three-bar 1"$ with 2¼" embedment and 3/4"
spacing and cover.

Figure No. 8-A.

A typical failure. The specimens with 1" cover and 24" embedment failed with an explosive force but with the above general pattern. Failure generally was at right angles to the lugs as can be seen in the photograph.

Figure No. 8-A.

A typical failure. The specimens with 1" cover and 24" embedment failed with an explosive force but with the above general pattern. Failure generally was at right angles to the lugs as can be seen in the photograph.

Water gain was observed in all specimens, about 3% of the area under the bars not being effective in bond. Very little mill scale adhered to the concrete after failure.

The absence of a cap on the loaded end of the concrete resulted in no local failures.

Variation in maximum aggregate size caused no apparent variation in compressive strength or bond resistance.

Water gain was observed in all specimens, about 3% of the area under the bars not being effective in bond. Very little mill scale adhered to the concrete after failure.

The absence of a cap on the loaded end of the concrete resulted in no local failures.

Variation in maximum aggregate size caused no apparent variation in compressive strength or bond resistance.

PLAIN BAR TESTS

The plain-bar tests were made as a reconnaissance to determine if plain bars might develop a higher bond efficiency or possibly higher bond values than deformed bars with corresponding values of thin cover. Unavoidable variations in the rust on the bars resulted in inconsistencies, but the over-all trend was the same as for deformed bars.

The splitting action was probably due to forces normal to the bars that were developed as slip progressed up the bar in the specimen. Some minute particles of the cement paste adhere to the steel in this slip. Their movement along the concrete surface resulted in a wedging action between concrete and steel, thus placing the surrounding concrete in tension and causing a splitting tendency in specimens of minimum cover which resulted in cracks on the narrow side.

The average bond value for all specimens of the same cover and spacing (each point representing the average of data for three specimens) is shown graphically in Figure No. 9.

Because of the few specimens tested, and the variations as mentioned above, reliable bonding efficiency curves could not be prepared.

PLAIN BAR TESTS

The plain-bar tests were made as a reconnaissance to determine if plain bars might develop a higher bond efficiency or possibly higher bond values than deformed bars with corresponding values of thin cover. Unavoidable variations in the rust on the bars resulted in inconsistencies, but the over-all trend was the same as for deformed bars.

The splitting action was probably due to forces normal to the bars that were developed as slip progressed up the bar in the specimen. Some minute particles of the cement paste adhere to the steel in this slip. Their movement along the concrete surface resulted in a wedging action between concrete and steel, thus placing the surrounding concrete in tension and causing a splitting tendency in specimens of minimum cover which resulted in cracks on the narrow side.

The average bond value for all specimens of the same cover and spacing each point representing the average of data for three specimens)is shown graphically in Figure No. 9.

Because of the few specimens tested, and the variations as mentioned above, reliable bonding efficiency curves could not be prepared.

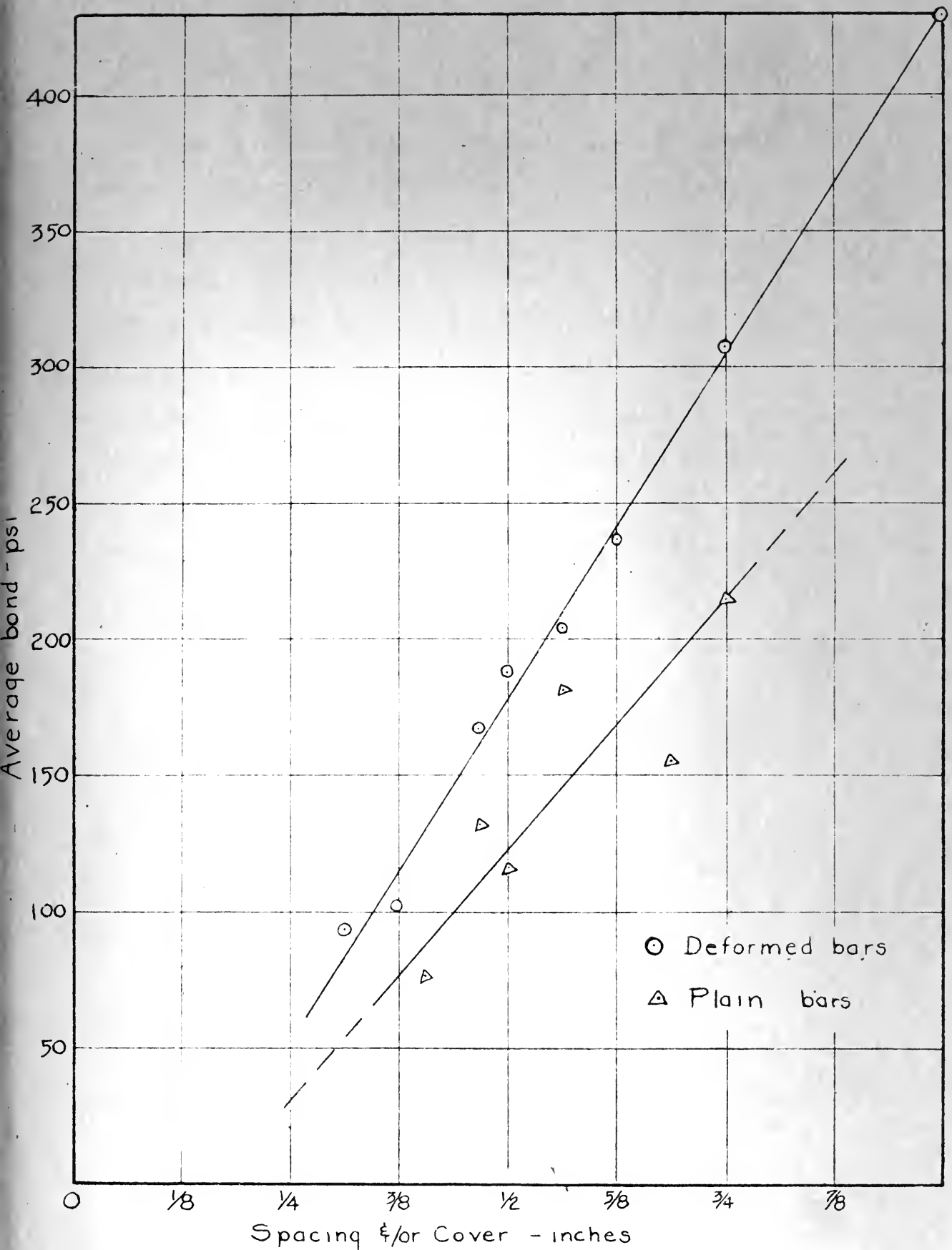

FIG. 9. AVERAGE BOND VS SPACING AND/OR COVER

Points are average of average bond for all specimens of the same cover.

VARIATION OF AVERAGE BOND WITH COVER AND SPACING

The "Average Bond vs Spacing and Cover" relationship is shown in Figure No. 9. This is the grand average curve for all specimens tested wherein the points represent the average unit bond value for all specimens in the deformed bar series curve, regardless of the size of the bars used and the lengths of embedment. It is to be noted that the curve for the deformed bars gave very consistent points that plot in a straight line for the covers and spacing from 5/16-in to 1-in. Hence from a practical standpoint, it can be shown for this series that the bonding efficiency as based on 100% for 1-in cover and spacing is as follows:

Cover and Spacing	% of Value for 1-in Cover
5/16	18.6%
3/8	26.0
15/32	37.2
1/2	40.7
9/16	48.8
5/8	55.8
3/4	70.7
1	100.0

It is realized that for other factors constant, the curves will level off and become horizontal for some greater thickness of cover beyond that investigated in this series.

For the ACI Code design bond stress of 160 psi for the mix used, with unit safety factor and regardless of the stress in the steel, the minimum cover and spacing from the curve is 15/32-in for the deformed bars and 5/8-in for the plain bars investigated.

VARIATION OF AVERAGE BOND WITH COVER AND SPACING

The "Average Bond vs Spacing and Cover" relationship is shown in Figure No. 9. This is the grand average curve for all specimens tested wherein the points represent the average unit bond value for all specimens in the deformed bar series curve, regardless of the size of the bars used and the lengths of embedment. It is to be noted that the curve for the deformed bars gave very consistent points that plot in a straight line for the covers and spacing from 5/16-in to 1-in. Hence from a practical standpoint, it can be shown for this series that the bonding efficiency as based on 100% for 1-in cover and spacing is as follows:

Cover and Spacing	% of Value for 1-in Cover
5/16	18.6%
3/8	26.0
15/32	37.2
1/2	40.7
9/16	48.8
5/8	55.8
3/4	70.7
1	100.0

It is realized that for other factors constant, the curves will level off and become horizontal for some greater thickness of cover beyond that investigated in this series.

For the ACI Code design bond stress of 160 psi for the mix used, with unit safety factor and regardless of the stress in the steel, the minimum cover and spacing from the curve is 15/32-in for the deformed bars and 5/8-in for the plain bars investigated

Stresses in all cases were in the elastic range for the steel used; hence, under similar conditions, the curve will give an indication of the unit bond to be expected when dealing with thin-shell precast concrete sections.

A breakdown of the "grand average" curve for the deformed bars is shown in Figure No. 10. Average bond vs cover and spacing is plotted for the three lengths of embedment for both 3/4-in and 1-in bars. The highest average bond for 3/4-in bars is for the 9-in embedment, followed by the 13½-in, and 18-in embedments. This increasing average bond with decreasing length of embedment is in agreement with the results of previous investigators. Curves for 1-in bars show similar results for lengths of embedment of 12-in, 18-in, and 24-in, respectively.

A comparison shows that for the 18" length of embedment with equal cover and spacing the 3/4" bars developed an average bond which varied from 10 to 15% greater than that for the 1" bars. Had the 3/4" and 1" bars developed equal average bond, the 1" bar specimens should have developed loads 33-1/3% higher than those with 3/4" bars due to ratio of areas per unit length. Failure, however, occurred by splitting, i.e., tension in the concrete, before equal bond was developed, but not at equal loads for the 3/4" and 1" bar specimens. If the splitting forces developed by the 3/4" and 1" bars had been the same for equal loads, the ultimate should have been the same for specimens with the same length of embedment, and the average bond for the 3/4" bars would have been 33-1/3% higher than that for the 1" bars. Actually the results are somewhere between the extremes of equal average

stresses in all cases were in the elastic range for the steel used; hence, under similar conditions, the curve will give an indication of the unit bond to be expected when dealing with thin-shell precast concrete sections.

A breakdown of the "grand average" curve for the deformed bars is shown in Figure No. 10. Average bond vs cover and spacing is plotted for the three lengths of embedment for both 3/4-in and 1-in bars. The highest average bond for 3/4-in bars is for the 9-in embedment, followed by the 13½-in, and 18-in embedments. This increasing average bond with decreasing length of embedment is in agreement with the results of previous investigations. Curves for 1-in bars show similar results for lengths of embedment of 12-in, 18-in, and 24-in, respectively.

A comparison shows that for the 18" length of embedment with equal cover and spacing the 3/4" bars developed an average bond which varied from 10 to 15% greater than that for the 1" bars. Had the 3/4" and 1" bars developed equal average bond, the 1" bar specimens should have developed loads 33-1/3% higher than those with 3/4" bars due to ratio of areas per unit length. Failure, however, occurred by splitting, i.e., tension in the concrete, before equal bond was developed, but not at equal loads for the 3/4" and 1" bar specimens. If the splitting forces developed by the 3/4" and 1" bars had been the same for equal loads the ultimate should have been the same for specimens with the same length of embedment, and the average bond for the 3/4" bars would have been 33-1/3% higher than that for the 1" bars. Actually the results are somewhere between the extremes of equal average

bond and equal ultimate load for the specimens as shown by the "Ultimate Load vs Cover and Spacing" curves. (Figure No. 11).

The displacement of the curves indicates that, for the thin sections employed in this series, the bond is a function of the tensile strength of the concrete.

bond and equal ultimate load for the specimens as shown by the "Ultimate Load vs Cover and Spacing" curves. (Figure No. 11).

The displacement of the curves indicates that, for the thin sections employed in this series, the bond is a function of the tensile strength of the concrete.

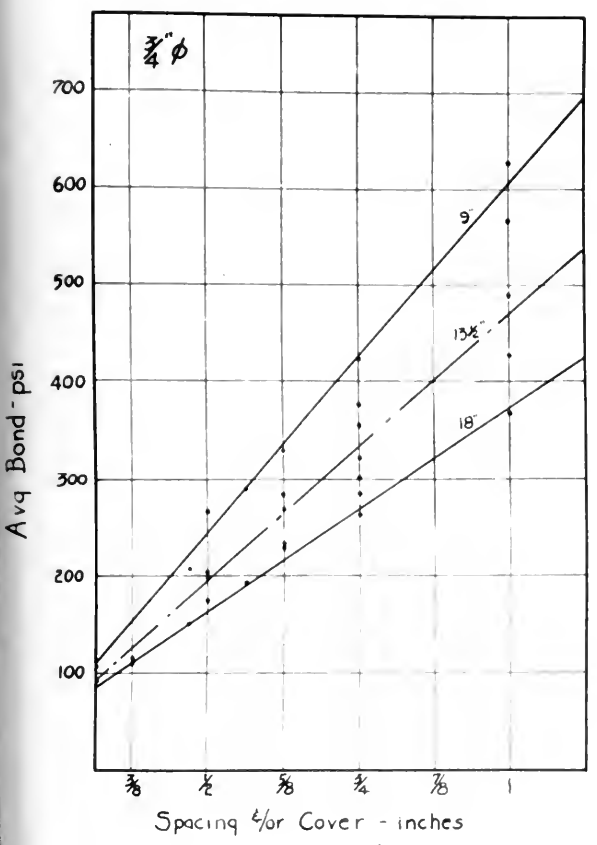

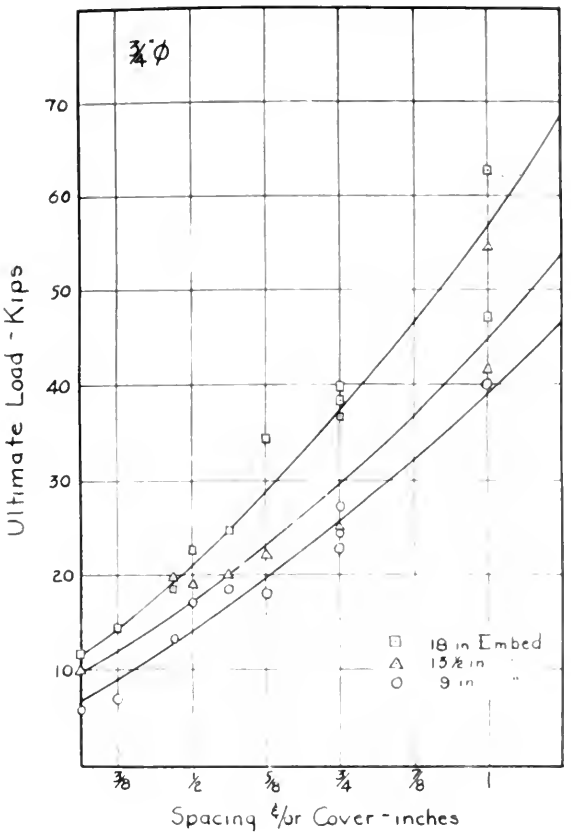

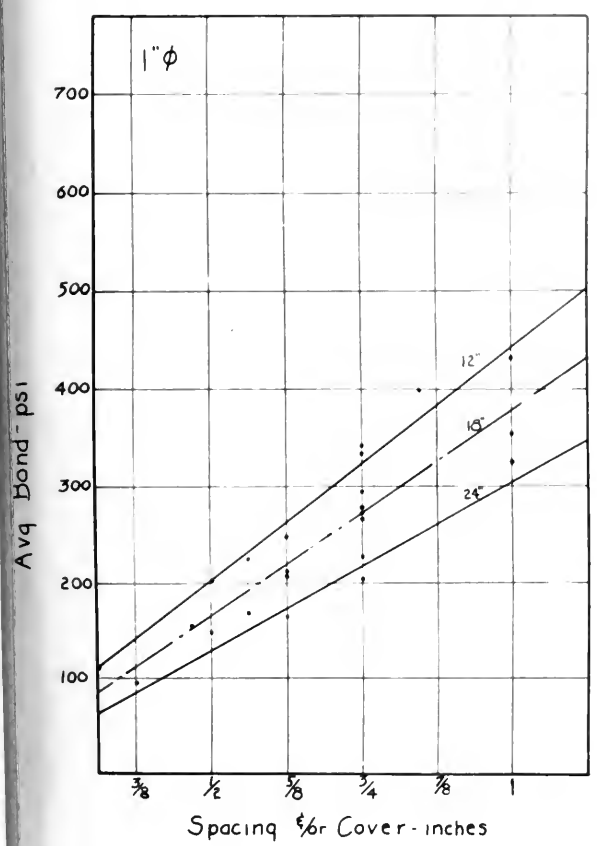

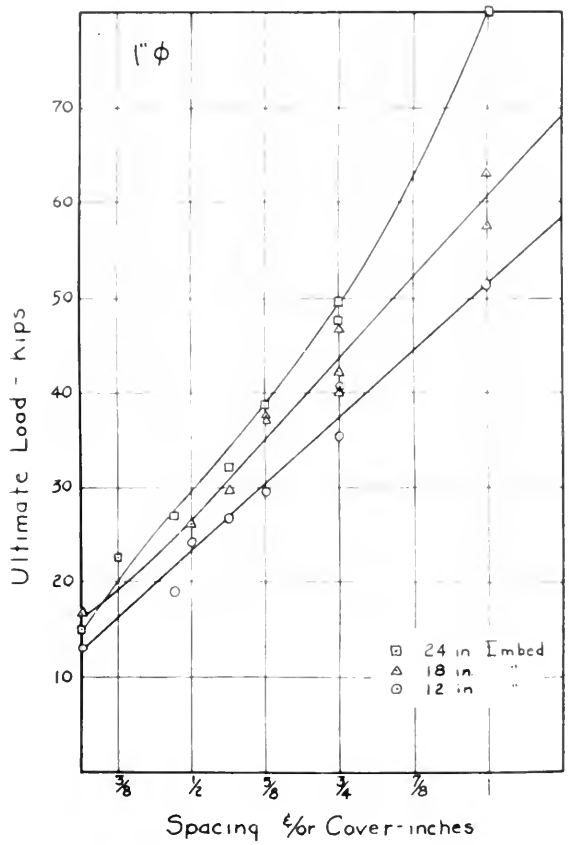

FIG. 10. VARIATION OF BOND WITH COVER

For deformed bars showing spread of points caused by variations in length of embedment

FIG. 11. VARIATION OF ULTIMATE LOAD WITH COVER

For deformed bars with varying embedments

DISCUSSION ON CONCEPT OF BOND.

As pointed out by Gilkey, "bond stress can be present only in a region of changing stress in the steel or concrete. Bond is what makes stress transfer possible". The mechanical concept of bond is that of a combination of adhesive and frictional forces. As Kelley (14) states, "we must rely upon frictional resistance and not adhesion, for once a differential movement occurs between steel and concrete, adhesion is likely to be destroyed". Since stress transfer from the steel automatically insures a proportional amount of strain or relative movement between the concrete in compression and the steel in tension, the average bond as computed from ultimate load and total surface area of the reinforcing bar is a measure of frictional resistance. The adhesive bond having been successively released throughout the length of the bar prior to "first slip" or failure.

The frictional resistance is influenced by the roughness factor between the steel and concrete, that is by surface irregularities of the bar combined with any tightly adhering mill scale, rust, or cement paste. But, from the mechanics of the problem, this bonding force "must be proportional to the lateral pressures which exist or are developed between steel and concrete". (Kelley) (14).

As previously noted, 100% of the specimens using deformed bars were split by the wedging action of the lugs and the resulting tensile failure of the concrete. The questions of the mechanics of lug action are tantalizing. When does the lug actually become effective in increasing bond? What is the nature of this action? Obviously some slip between the bar and concrete must occur before

DISCUSSION ON CONCEPT OF BOND.

As pointed out by Gilkey, "bond stress can be present only in a region of changing stress in the steel or concrete. Bond is what makes stress transfer possible". The mechanical concept of bond is that of a combination of adhesive and frictional forces. As Kelley (14) states, "we must rely upon frictional resistance and not adhesion, for once a differential movement occurs between steel and concrete, adhesion is likely to be destroyed". Since stress transfer from the steel automatically insures a proportional amount of strain or relative movement between the concrete in compression and the steel in tension, the average bond as computed from ultimate load and total surface area of the reinforcing bar is a measure of frictional resistance. The adhesive bond having been successively released throughout the length of the bar prior to "first slip" or failure.

The frictional resistance is influenced by the roughness factor between the steel and concrete, that is by surface irregularities of the bar combined with any tightly adhering mill scale, rust, or cement paste. But, from the mechanics of the problem, this bonding force "must be proportional to the lateral pressures which exist or are developed between steel and concrete". (Kelley) (14).

As previously noted, 100% of the specimens using deformed bars were split by the wedging action of the lugs and the resulting tensile failure of the concrete. The questions of the mechanics of lug action are tantalizing. When does the lug actually become effective in increasing bond? What is the nature of this action? Obviously some slip between the bar and concrete must occur before

the lugs become effective in bearing. Conversely, the effectiveness of the lug must depend to a certain extent upon the crushing or compressive strength of the concrete. That bond cannot be safely expressed as a linear function of concrete compressive strength has been repeatedly proved. Nevertheless, the fundamental consideration remains that stress must be transferred from the steel to the concrete. Be this by a locking action or by the pure concepts of friction as treated in mechanics, a certain amount of surrounding concrete mass is essential, in the former to withstand the shearing action resulting, and in the latter to maintain the required lateral force.

Kelley, (14) in his paper on factors influencing bond, states that bond strength is greatly influenced by volumetric changes within the paste of the concrete surrounding the bar. Gilkey, in his discussion of Kelley's paper, comments that "tests reported in Proceedings of Highway Research Board (1936) tend to confirm this conclusion relative to the greater bond resistance of concrete dry at test over that in a saturated condition. If this increase is valid and is due to shrinkage from drying ..... the thicker the shrinking mass around the bar the greater should be the pressure exerted upon the bar".

This contraction due to drying after the initial shrinkage and set has occurred manifests itself in a gripping or "hugging" of the reinforcement as well as the aggregate in concrete. If the magnitude of the pressure exerted is proportional to the thickness of the surrounding concrete, obviously less bond is to be expected with thinner cover.

be expected with thinner cover.

Regardless whether or not the above contentions are in themselves plausible, or if variations in lug sizes and shapes, in the homogenity of the concrete paste, in the methods of placement and vibration, in the method and length of curing, or in the magnitude of the "released" adhesive force affect the bonding strength in a varying and somewhat unpredictable manner, the contention that increasing the cover will increase the bond up to a more or less definite limit, is, we believe, clearly shown in Figures Nos. 9 and 10.

Regardless whether or not the above contentions are in themselves plausible, or if variations in ing sizes and shapes, in the homogeneity of the concrete paste, in the methods of placement and vibration, in the method and length of curing, or in the magnitude of the "released" adhesive force effect the bonding strength in a varying and somewhat unpredictable manner, the contention that increasing the cover will increase the bond up to a more or less definite limit, is, we believe, clearly shown in Figures Nos. 9 and 10.

STRESS-SLIP RELATIONS AS A MEASURE OF BOND EFFICIENCY

Believing that bar stress is a more reasonable criterion for bond efficiency in terms of slip at the loaded end than stresses developed by the bars at some arbitrarily selected value of slip, the method adopted by Clark (25) has been applied in this study.

The stress-slip relation, as measured at the loaded end (the slip of the three bars averaged and equal loads assumed in each of the three bars) is shown in Figure No. 12. Since plots for the various lengths of embedments showed no variation in slope as established by (Clark) (25), due probably to the extremely thin covers employed, curves represent average values for several specimens, lengths of embedment being neglected.

It is to be noted that the rates of stress transfer in these tests did not equal those obtained by Clark for values of slip up to 4/1000-in. For values of slip of 5/1000-in and more, however, specimens with covers of 3/4- and 5/8-in continued to load and the stresses exceeded the values of stress obtained with the top bar in Clark's series which had depth of concrete above the bar more nearly corresponding to that in this series. This is not true in specimens with covers of 1/2- and 3/8-in in which the maximum stress is below that he obtained. For comparison a graph is reproduced from Clark. (Figure No. 13).

The rates of stress transfer from steel to concrete are clearly shown in the figure and the flattening of the curves for less than 3/4-in cover clearly demonstrates the increasing

STRESS-SLIP RELATIONS AS A MEASURE OF BOND EFFICIENCY

Believing that bar stress is a more reasonable criterion for bond efficiency in terms of slip at the loaded end than stresses developed by the bars at some arbitrarily selected value of slip, the method adopted by Clark (25) has been applied in this study.

The stress-slip relation, as measured at the loaded end (the slip of the three bars averaged and equal loads assumed in each of the three bars) is shown in Figure No. 12. Since plots for the various lengths of embedments showed no variation in slope as established by (Clark) (25), due probably to the extremely thin covers employed, curves represent average values for several specimens, lengths of embedment being neglected.

It is to be noted that the rates of stress transfer in these tests did not equal those obtained by Clark for values of slip up to 4/1000-in. For values of slip of 5/1000-in and more, however, specimens with covers of 3/4- and 5/8-in continued to load and the stresses exceeded the values of stress obtained with the top bar in Clark's series which had depth of concrete above the bar more nearly corresponding to that in this series. This is not true in specimens with covers of 1/2- and 3/8-in in which the maximum stress is below that he obtained. For comparison a graph is reproduced from Clark. (Figure No. 13).

The rates of stress transfer from steel to concrete are clearly shown in the figure and the flattening of the curves for less than 3/4-in cover clearly demonstrates the increasing

inability of the concrete to develop bond with decreasing values of cover and spacing.

Although this study was made with only one type of deformed bar, it is reasonable to expect similar trends with other types, especially since the plain bar specimens showed similar trends, but with greater slips for the same stresses.

Accepting "stress transfer rate" as a criterion of bonding efficiency, the curves clearly show the increasing rates for corresponding increase in cover. At exactly what value of slip the effectiveness or usefulness of a structure becomes doubtful depends upon the particular structure under consideration and the value of the design stress in the reinforcing steel. For a structure using relatively low stresses in the reinforcing steel, such as one intended to confine liquids and avoid leakage, the cracks and deflections must be kept small. Both of these imposed conditions are a function of the slip which must, therefore, be also maintained a minimum. For such structures the value of cover to be used must be such, that for the design stress, the corresponding slip is small; i.e., a point on the steeper region of the curve. Conversely, in members for which such conditions do not prevail, a thinner cover may be employed for a given design stress, permitting greater slips to occur before developing the required stress.

It is to be noted that the ultimate value of stress possible increases with increasing cover as well as the rate of stress transfer. This ultimate value is also a function of the length of embedment, as might be expected; but the initial rate of transfer is independent of the length of embedment.

inability of the concrete to develop bond with decreasing values of cover and spacing.

Although this study was made with only one type of deformed bar, it is reasonable to expect similar trends with other types, especially since the plain bar specimens showed similar trends, but with greater slips for the same stresses.

Accepting "stress transfer rate" as a criterion of bonding efficiency, the curves clearly show the increasing rates for corresponding increase in cover. At exactly what value of slip the effectiveness or usefulness of a structure becomes doubtful depends upon the particular structure under consideration and the value of the design stress in the reinforcing steel. For a structure using relatively low stresses in the reinforcing steel, such as one intended to confine liquids and avoid leakage, the cracks and deflections must be kept small. Both of these imposed conditions are a function of the slip which must, therefore, be also maintained a minimum. For such structures the value of cover to be used must be such, that for the design stress, the corresponding slip is small; i.e., a point on the steeper region of the curve. Conversely, in members for which such conditions do not prevail, a thinner cover may be employed for a given design stress permitting greater slips to occur before developing the required stress.

It is to be noted that the ultimate value of stress possible increases with increasing cover as well as the rate of stress transfer. This ultimate value is also a function of the length of embedment, as might be expected; but the initial rate of transfer is independent of the length of embedment.

The bonding efficiency curves,(Figure No. 12), show a displacement of the curves for the 3/4-in bars above those for the 1-in bars. Therefore the curve shows that for the same stress in the steel there is greater slip in the 1-in bar than for the 3/4-in bar. For an equal surrounding mass of concrete the lateral forces exerted upon the bar to develop bond should be equal. The unit pressure or bond intensity, however, is less for the 1-in bar because of the greater surface area per unit length. Since bond is a result of stress transfer, for equal value of stress in the steel, greater slip must occur in the 1-in bars before this stress is developed by bond.

The bonding efficiency curves, (Figure No. 12), show a displacement of the curves for the 3/4-in bars above those for the 1-in bars. Therefore the curve shows that for the same stress in the steel there is greater slip in the 1-in bar than for the 3/4-in bar. For an equal surrounding mass of concrete the lateral forces exerted upon the bar to develop bond should be equal. The unit pressure or bond intensity, however, is less for the 1-in bar because of the greater surface area per unit length. Since bond is a result of stress transfer, for equal value of stress in the steel, greater slip must occur in the 1-in bars before this stress is developed by bond.

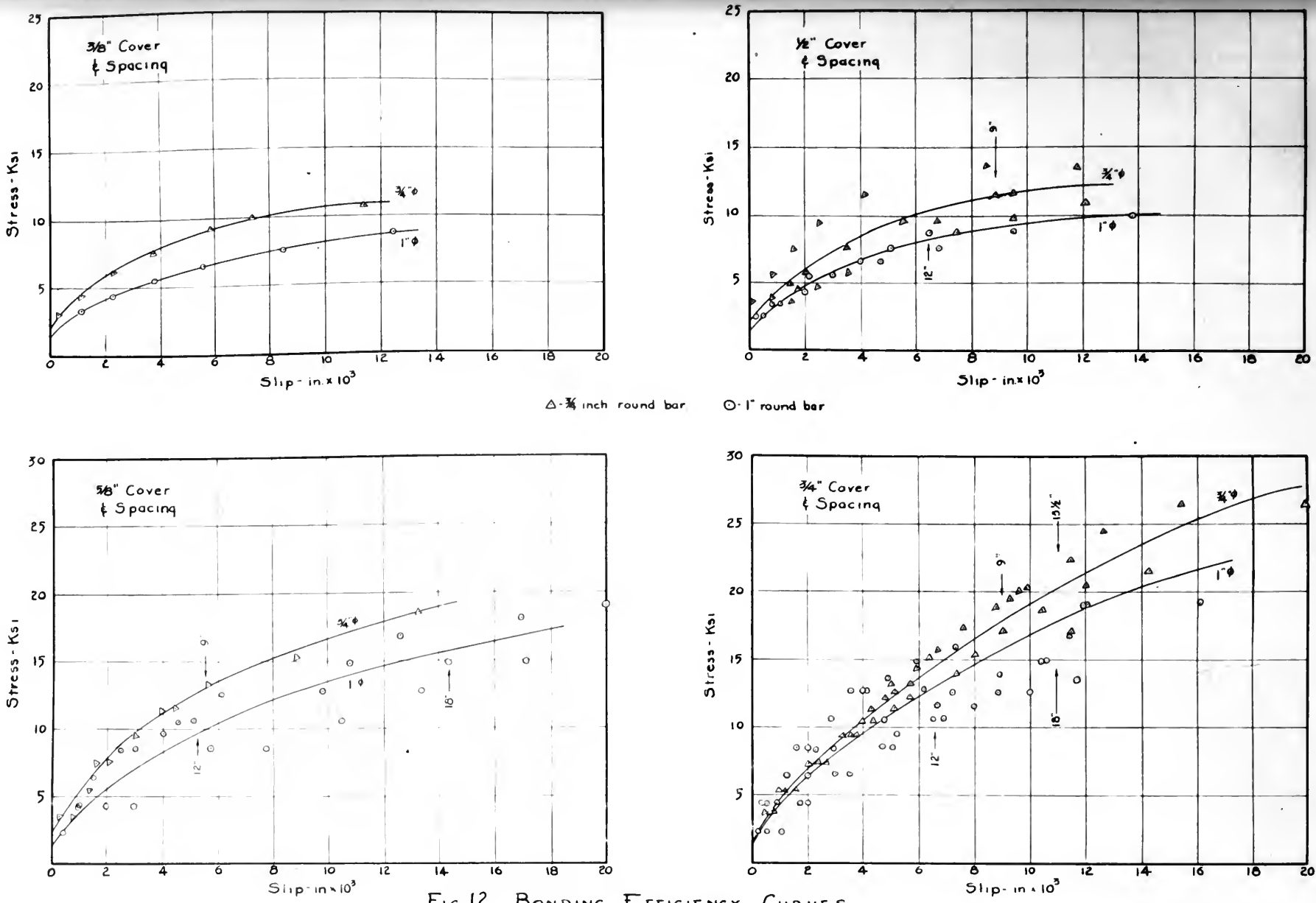

FIG. 12. BONDING EFFICIENCY CURVES

For numerous specimens of varying cover and spacing for 3/4 and 1 inch deformed bars with $\frac{\ell}{D}$ ratios of 12, 18, and 24. Increasing ultimate stress and increasing rate of stress transfer (Δ stress per unit slip) indicate increasing bonding efficiency with increasing cover. Slip measured at loaded end and plotted as rational average of slips for three bars per specimen. Stress = avg. stress in steel bar. Ultimate stresses developed are indicated for different lengths of embedment.

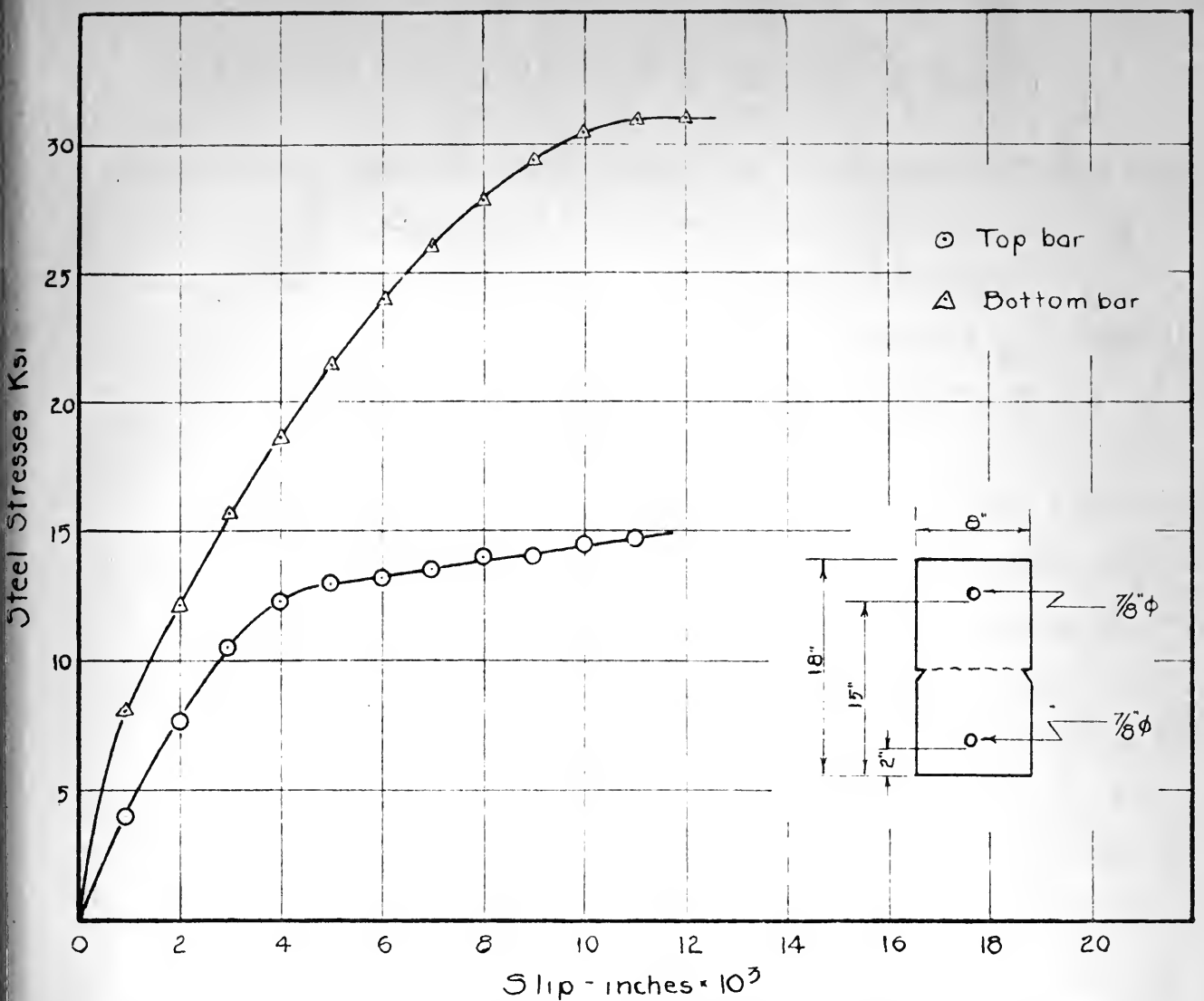

FIG. 13. BOND EFFICIENCY OF TYPE 16, 7/8" NOMINAL BAR. Embeded 16" in specimens cast as indicated. From Clark (ACI Journal, Feb. 47), presented for comparison.

The curves shown are for the same type of deformed bar used in these tests, each curve representing the average data obtained from three specimens.

In making comparisons with data gathered in this series due cognizance must be given the differences in bar diameter, length of embedment, and cover. Concrete averaged 5,600 psi at 28 days.

AVERAGE BOND AS A FUNCTION OF LENGTH-DIAMETER RATIO

Average bond values, based on ultimate load, are shown in Figures Nos. 14 and 15. as a function of L/D ratio. (Length of embedment/Bar dia.). The curves are plotted from data obtained on all specimens tested. Since time did not permit duplication of two batches of specimens, some curves are plotted from data on three specimens only.

In all cases, for the same L/D ratios, the 3/4-in bars developed higher average bond values for the same cover and spacing. Since the failure of the specimens was by tension in the concrete (longitudinal splitting) due to lug action and other wedging forces, it seems reasonable to explain this phenomena, at least in part, by considering tension in the concrete in planes through the axes of the bars. For equal covers and spacing, and length of embedment, the resistance of the concrete to tensile failure would be the same for 1-in and 3/4-in bars. The 1-in bar, because of its greater circumference and surface area per unit length, should develop the same splitting forces at lower unit stresses than will the 3/4-in bar.

Bond action, as previously discussed, is a transfer of stress along the bar and therefore of a progressive nature. That is, "there must be a progressive slippage or successive letting-go along the bar before either load or slip is transmitted to the unloaded end....".."Because of the inequality of bond stress along the bar, the length of embedment must be recognized as one of the significant variables when bond tests are compared." (Gilkey).(18).

AVERAGE BOND AS A FUNCTION OF LENGTH-DIAMETER RATIO

Average bond values, based on ultimate load, are shown in Figures Nos. 14 and 15, as a function of L/D ratio. (Length of embedment/Bar dia.). The curves are plotted from data obtained on all specimens tested. Since time did not permit duplication of two batches of specimens, some curves are plotted from data on three specimens only.

In all cases, for the same L/D ratios, the 3/4 -in bars developed higher average bond values for the same cover and spacing. Since the failure of the specimens was by tension in the concrete (longitudinal splitting) due to lug action and other wedging forces, it seems reasonable to explain this phenomena, at least in part, by considering tension in the concrete in planes through the axes of the bars. For equal covers and spacing, and length of embedment, the resistance of the concrete to tensile failure would be the same for 1-in and 3/4-in bars. The 1-in bar, because of its greater circumference and surface area per unit length, should develop the same splitting forces at lower unit stresses than will the 3/4-in bar.

Bond action, as previously discussed, is a transfer of stress along the bar and therefore of a progressive nature. That is, "there must be a progressive slippage or progressive setting-up along the bar before either load or slip is transmitted to the unloaded end....","Because of the impossibility of maintaining the bar, the length of embedment must be recognized as one of the significant variables when bond tests are compared." (Gilkey).(Id)

As pointed out by Gilkey and others, average bond decreases as length of embedment increases, even though the ultimate load developed increases with increasing length of embedment. The curves of average bond vs L/D ratios show further that this condition exists for each of the varying covers used, provided this cover gives sufficient area of concrete to avoid a compression failure of the specimen.

This series of curves illustrates quite clearly, we believe, the increased value of average bond which may be realized by increasing the cover and clear bar spacing within the limits shown. Average bond is not the maximum bond which may be successively developed along the bar, but it is the principle basis of design.

As pointed out by Gilkey and others, average bond decreases as length of embedment increases, even though the ultimate load developed increases with increasing length of embedment. The curves of average bond vs L/D ratios show further that this condition exists for each of the varying covers used, provided the cover gives sufficient area of concrete to avoid a compression failure of the specimen.

This series of curves illustrates quite clearly, we believe, the increased value of average bond which may be realized by increasing the cover and clear bar spacing within the limits shown. Average bond is not the maximum bond which may be successively developed along the bar, but it is the principle basis of design.

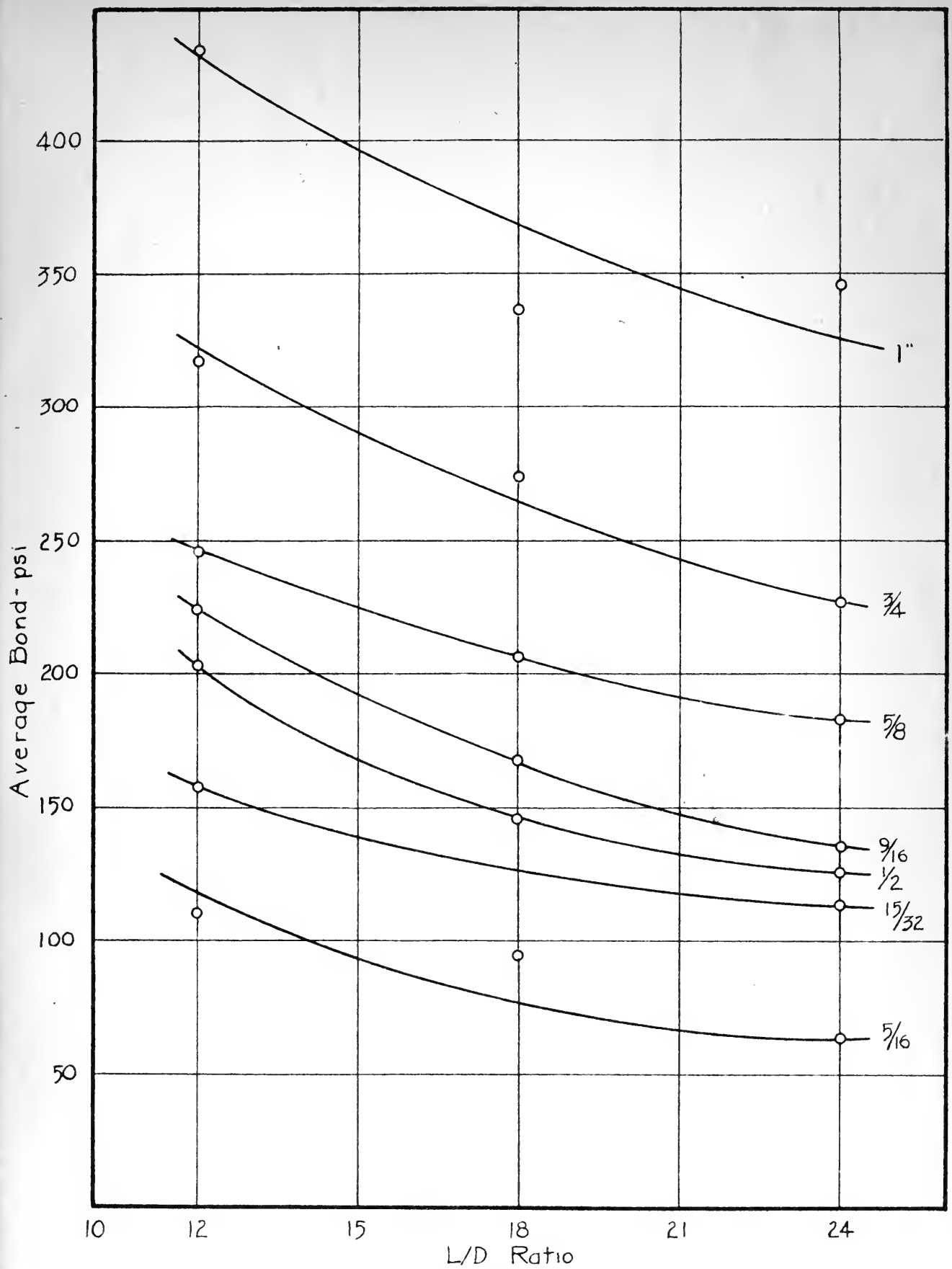

FIG. 14. AVERAGE BOND vs L/D ratio.

For varying cover and/or spacing for 1" round deformed bars

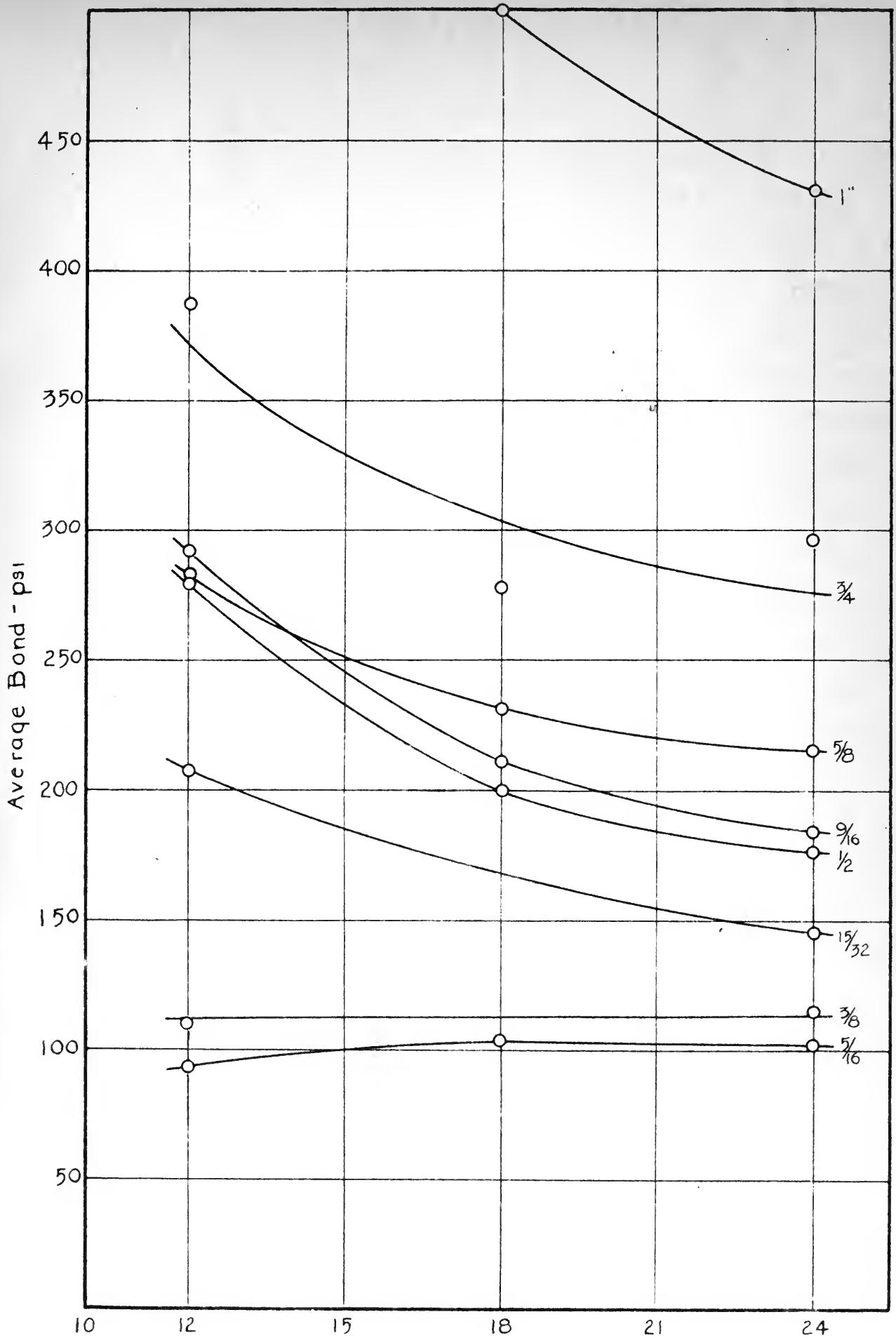

FIG. 15. AVERAGE BOND VS L/D RATIO

For varying cover and/or spacing for 3/4" round deformed bars

Time did not permit sufficient tests, namely those employing one-and two-bar specimens, to determine the relation existing between cover and spacing. In this report the values have, in all cases, been equal and hence the terms synonymous. In view of the observation, however, that failure of all specimens was attended by splitting between the bars, it seems reasonable to assume that a somewhat higher value of average bond could be realized by maintaining the cover, as employed in these tests, and increasing the clear bar spacing. The wedging forces developed by the lugs must be resisted by the concrete between the bars acting in tension. In these tests, since cover and spacing were equal, an outer bar had a width of concrete of "S"-in on the outside and "S/2"-in on the inside, since the concrete in the clear spacing is effective for two bars. In the light of this explanation, it appears that the middle bar should have slipped more for a given stress than the outer bars, since it was surrounded by less effective concrete. This trend, though manifested to a limited degree was not sufficiently consistent to be conclusive.

The splitting of the specimens has heretofore been attributed to the wedging action of the lugs on the deformed bars. However, tests on the plain bars indicated the same tendency, but only for those specimens of minimum cover. It is possible, therefore, that cement paste tightly adhering to the plain bars produced sufficient roughness to cause a similar, but lesser splitting force. Splitting of specimens is not an unusual occurrence in pull-out tests. Gilkey (18) observed this action in his tests and remarked, "There is nothing to indicate, however, that

Time did not permit sufficient tests, namely those employing one-and two-bar specimens, to determine the relation existing between cover and spacing. In this report the values have, in all cases, been equal and hence the terms synonymous. In view of the observation, however, that failure of all specimens was attended by splitting between the bars, it seems reasonable to assume that a somewhat higher value of average bond could be realized by maintaining the cover, as employed in these tests, and increasing the clear bar spacing. The wedging forces developed by the lugs must be resisted by the concrete between the bars acting in tension. In these tests, since cover and spacing were equal, an outer bar had a width of concrete of "3"-in on the outside and "3\2"-in on the inside, since the concrete in the clear spacing is effective for two bars. In the light of this explanation, it appears that the middle bar should have slipped more for a given stress than the outer bars, since it was surrounded by less effective concrete. This trend, though manifested to a limited degree was not sufficiently consistent to be conclusive.

The splitting of the specimens has heretofore been attributed to the wedging action of the lugs on the deformed bars. However, tests on the plain bars indicated the same tendency, but only for those specimens of minimum cover. It is possible, therefore, that cement paste rigidly adhering to the plain bars produced sufficient roughness to cause a similar, but lesser splitting force. Splitting of specimens is not an unusual occurrence in pull-out tests. Clikey (18) observed this action in his tests and remarked, "There is nothing to indicate, however, that

increased depth of cover can be justified as a device for preventing splitting from the wedging action of the lugs." This conclusion is predicated on the fact that failure of the specimen had already occurred, either by "first slip" on the free end of the specimen or by a slip of 1/100-in at the loaded end. Obviously, to develop a minimum bond resistance when failure is by splitting, sufficient cover must be used to obtain that value without failure.

For thin sections using plain bars, these tests indicate a minimum value of cover without splitting.

Considering length of embedment as shown in Figure 16 with average bond vs inches of embedment, curves for 1-in and 3/4-in bars form continuous curves.

increased depth of cover can be justified as a device for preventing splitting from the wedging action of the lugs." This conclusion is predicated on the fact that failure of the specimen had already occurred, either by "first slip" on the free end of the specimen or by a slip of 1/100-in at the loaded end. Obviously, to develop a minimum bond resistance when failure is by splitting, sufficient cover must be used to obtain that value without failure.

For thin sections using plain bars, these tests indicate a minimum value of cover without splitting.

Considering length of embedment as shown in Figure 16 with average bond vs inches of embedment, curves for 1-in and 3/4-in bars form continuous curves.

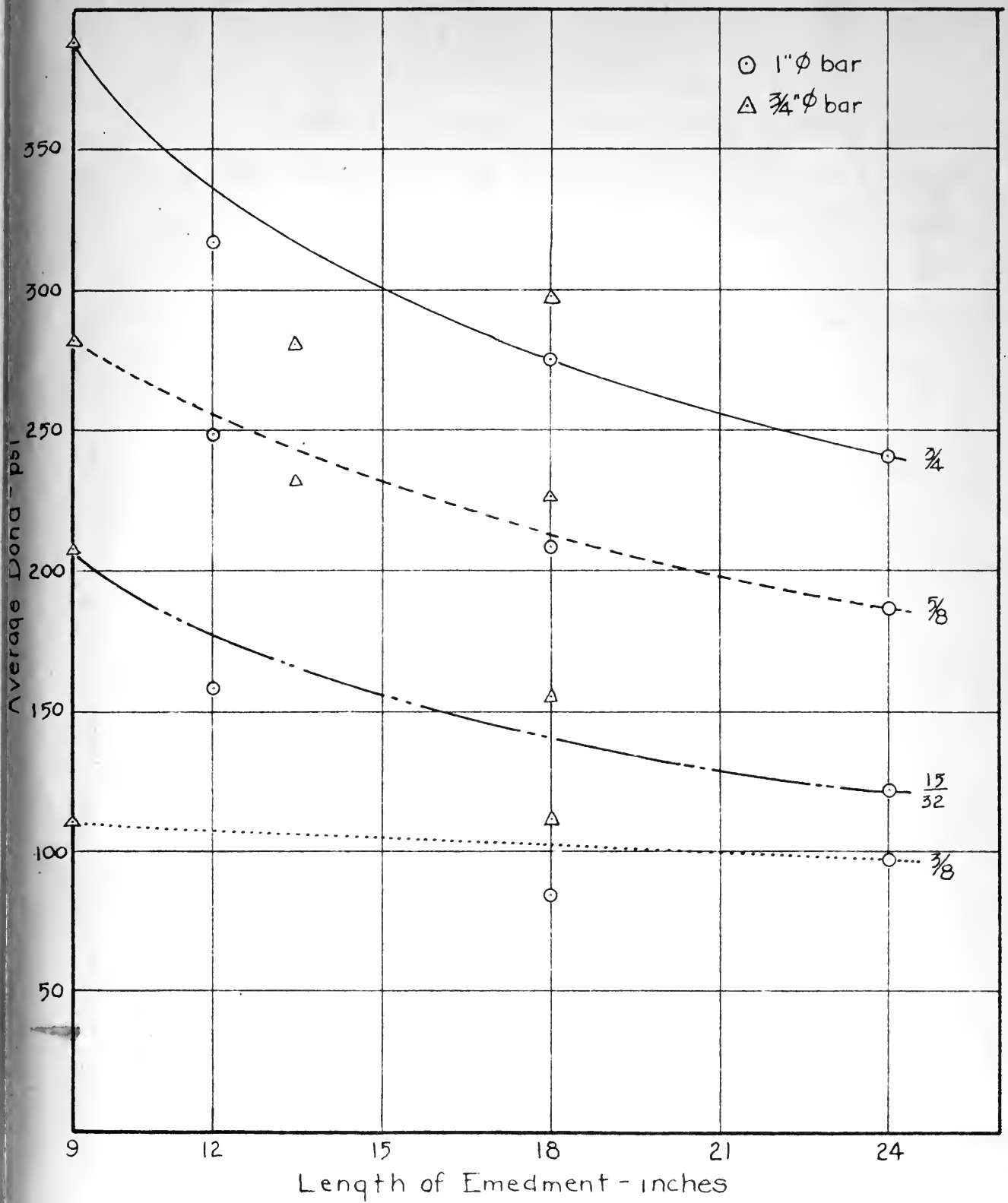

FIG. 16. AVERAGE BOND AS A FUNCTION OF EMBEDMENT

For the spacing and/or cover as shown. The dotted curve for 3/8" cover indicates minimum cover whereafter compression failures predominate.

CONCLUSIONS

1. Within the limits of these tests, bond resistance for a given size of bar is proportional to cover and spacing, i.e., the thicker the cover, the higher the bond resistance.

2. Within the limits of these tests, bond stresses developed with a given spacing and cover vary inversely as the size of bar, i.e., the greater the bar size, the less the bond stress.

3. Plain bars in thin-shell precast concrete exhibit bond characteristics and trends similar to deformed bars.

4. For a given stress in the steel, the thinner the cover and spacing, the greater the slip at the loaded end.

5. For the variations in compressive strength of concrete employed in these tests there was no appreciable variation in bond resistance or bonding efficiency.

6. Water gain, to a limited extent, is present in very stiff mixes.

7. The use of different size maximum aggregate had no influence on compressive strength or bond resistance.

Attention is called to the fact that the results obtained and the conclusions arrived at herein do not necessarily apply when the conditions are different from those that prevailed in this investigation.

CONCLUSIONS

1. Within the limits of these tests, bond resistance for a given size of bar is proportional to cover and spacing, i.e., the thicker the cover, the higher the bond resistance.

2. Within the limits of these tests, bond stresses developed with a given spacing and cover vary inversely as the size of bar, i.e., the greater the bar size, the less the bond stress.

3. Plain bars in thin-shell precast concrete exhibit bond characteristics and trends similar to deformed bars.

4. For a given stress in the steel, the thinner the cover and spacing, the greater the slip at the loaded end.

5. For the variations in compressive strength of concrete employed in these tests there was no appreciable variation in bond resistance or bonding efficiency.

6. Water gain, to a limited extent, is present in very stiff mixes.

7. The use of different size maximum aggregate had no influence on compressive strength or bond resistance.

Attention is called to the fact that the results obtained and the conclusions arrived at herein do not necessarily apply when the conditions are different from those that prevailed in this investigation.

TOPICS FOR FURTHER INVESTIGATION

(All with respect to thin-shell precast concrete).

1. Completion of the test series to determine the relationship of one-, two-, and three-bar specimens.

2. Bond resistance developed at the end of 24 hours.

3. The possibility of increasing the bond efficiency by use of a steel wire spiral or steel mesh enclosing each reinforcing bar. The method should be applicable in the field to be of practical value.

4. Effects on bond of the use of sealing compounds to prevent the loss of moisture during curing.

5. Effects on bond of steam curing.

6. Bond efficiencies with other types of deformed bars.

7. Beam tests to check values of bond determined by pull-out tests.

8. The effects of using similar multi-bar specimens with cover equal to one-half the clear spacing.

9. Investigation of the minimum cover for different sizes of reinforcing bars.

10. The effect of different kinds of aggregates, crushed and smooth.

TOPICS FOR FURTHER INVESTIGATION

(All with respect to thin-shell precast concrete).

1. Completion of the test series to determine the relationship of one-, two-, and three-bar specimens.

2. Bond resistance developed at the end of 24 hours.

3. The possibility of increasing the bond efficiency by use of a steel wire spiral or steel mesh enclosing each reinforcing bar. The method should be applicable in the field to be of practical value.

4. Effects on bond of the use of sealing compounds to prevent the loss of moisture during curing.

5. Effects on bond of steam curing.

6. Bond efficiencies with other types of deformed bars.

7. Beam tests to check values of bond determined by pull-out tests.

8. The effects of using similar multi-bar specimens with cover equal to one-half the clear spacing.

9. Investigation of the minimum cover for different sizes of reinforcing bars.

10. The effect of different kinds of aggregates, crushed and smooth.

BIBLIOBRAPHY

A thorough study was made previous to any casting in order to gain sufficient knowledge of testing techniques and of the factors affecting bond so that the variables involved could be held as nearly constant as possible. Study was concentrated particularly in respect to the following items:

1. The concept of bond.
2. Nature of bar surface and surface coating.
3. Types of deformations on reinforcing steel.
4. Casting orientation with respect to lugs on the bars.
5. Rust on deformed bars.
6. Length of embedment.
7. Vibration and effects of over-vibration.
8. Mixing of concrete, aggregates, curing, and age.
9. Consistency of concrete.
10. Thin-shell precast concrete.
11. Testing procedures and techniques.

Following is a list, in chronological order, of references on bond and thin-shell sections:

1. Withey, M. O. "Test of Plain and Reinforced Concrete, Series of 1906" Bul. 175, University of Wisconsin Engineering Series 4,1. 1907.

One of the earliest investigations covering bond which set the pattern for pull-out tests. For low strength concrete bond seems to be about proportional to the compressive strength of the concrete.

2. Withey, M. O. "Tests on Bond Between Concrete and Steel in Reinforced Concrete Beams" Bul. 321, University of Wisconsin Engineering Series 5,5. 1909.

BIBLIOGRAPHY

A thorough study was made previous to any casting in order to gain sufficient knowledge of testing techniques and of the factors affecting bond so that the variables involved could be held as nearly constant as possible. Study was concentrated particularly in respect to the following items:

1. The concept of bond.
2. Nature of bar surface and surface coating.
3. Types of deformations on reinforcing steel.
4. Casting orientation with respect to lugs on the bars.
5. Rust on deformed bars.
6. Length of embedment.
7. Vibration and effects of over-vibration.
8. Mixing of concrete, aggregates, curing, and age.
9. Consistency of concrete.
10. Thin-shell precast concrete.
11. Testing procedures and techniques.

Following is a list, in chronological order, of references on bond and thin-shell sections:

1. Withey, M. O. "Test of Plain and Reinforced Concrete. Series of 1906" Bul. 175, University of Wisconsin Engineering Series 4,1. 1907.

One of the earliest investigations covering bond which set the pattern for pull-out tests. For low strength concrete bond seems to be about proportional to the compressive strength of the concrete.

2. Withey, M. O. "Tests on Bond Between Concrete and Steel in Reinforced Concrete Beams" Bul. 321, University of Wisconsin Engineering Series 5,5. 1909.

Among the variables investigated are included age, mixture, consistency, and size of bar. Pull-out tests gave bond resistances 1½ to 2 times that in beams. Withey ascribes the extra strength in pull-out specimens to compression in the concrete around the bar at the face of the block. Abrams' tests appear to discredit this contention.

3. Abrams, D. A., "Tests of Bond Between Concrete and Steel" Bul. 71, Eng. Exp. Sta., University of Illinois, 1913.

This comprehensive study is excellent for an introduction to most of the problems relating to bond. With the primary exceptions, that bond is proportional to the compressive strength of the concrete, Abrams' conclusions are in accord with the best current knowledge.

4. Slater, W. A., F. E. Richart, and G. G. Scofield. "Tests of Bond Resistance Between Concrete and Steel" Technological Paper No. 173, U. S. National Bureau of Standards, 1920.

Maximum bond resistances for plain and deformed bars were about 14 and 20% of ultimate compressive strength, respectively. Cites a specimen with bad honeycombing beneath bars, a factor to watch when working with harsh mixtures.

5. Slater, W. A. "Tests of Bond Resistance in Reinforced Concrete Beams" Eng. News-Record, 94:1050-1053, June 25, 1925.

The author favors beam type specimens over pull-out in tests for bond.

6. Abrams, D. A. "Studies of Bond Between Concrete and Steel" Proc., ASTM, 25,II: 256-272, 1925.

Among the variables investigated are included age, mixture, consistency, and size of bar. Pull-out tests gave bond resistances 1½ to 2 times that in beams. Withey ascribes the extra strength in pull-out specimens to compression in the concrete around the bar at the face of the block. Abrams' tests appear to discredit this contention.

3. Abrams, D. A., "Tests of Bond Between Concrete and Steel" Bul. 71, Eng. Exp. Sta., University of Illinois, 1913.

This comprehensive study is excellent for an introduction to most of the problems relating to bond. With the primary exceptions, that bond is proportional to the compressive strength of the concrete, Abrams' conclusions are in accord with the best current knowledge.

4. Slater, W. A., F. E. Richart, and G. E. Woolfolk. "Tests of Bond Resistance Between Concrete and Steel" Technological Paper No. 172, U. S. National Bureau of Standards, 1920.

Maximum bond resistances for plain and deformed bars were about 1½ and 20% of ultimate compressive strength, respectively. Cites a specimen with bad honeycombing beneath bars, a factor to watch when working with marsh mixtures.

5. Slater, W. A. "Tests of Bond Resistance in Reinforced Concrete Beams" Eng. News-Record, 94:1039-1053, June 25, 1925.

The author favors beam type specimens over pull-out in tests for bond.

6. Abrams, D. A. "Studies of Bond Between Concrete and Steel" Proc., ASTM, 25,II: 276-272, 1925.

Abrams shows the lack of proportionality between bond strength and compressive strength for values above 2000 psi. In discussion Abrams favors the pull-out type specimen for bond tests.

7. Gilkey, H. J. "Water Gain and Allied Phenomena in Concrete Work" Engr. News-Record, 98: 242-244, Feb. 10, 1927.

The author discusses and illustrates the tendency of water to travel upward through any workable concrete mixture until the mixture stiffens. Moisture is trapped beneath all horizontal surfaces, thus making the bond between solid particles less perfect on the under sides than on the upper sides. Though water gain is never absent in a workable mixture, it is aggravated by excess fluidity, over vibration, or other over-working, and poor gradation.

8. Edwards, L. N., and H. F. Greenleaf "Experimental Tests of Concrete-Steel Bond" Proc., ASTM, 28,II:584-598, 1928. Also discussions by E. F. Kelley, W. A. Slater, D. A. Abrams, F. E. Richart, and C. P. Derleth, p 599-604.

A report on pull-out tests using vertically and horizontally cast specimens. Also he used methods in accordance with the best field practice and brought out the reduction in bond due to improper or sloppy technique.

9. Richart, F. E., and V. P. Jensen. "Tests of Plain and Reinforced Concrete Made with Haydite Aggregates" Bul. 237, Engr. Exp. Sta., University of Illinois, 1931.

Using three kinds of aggregate gave similar results. Of

Abrams shows the lack of proportionality between bond strength and compressive strength for values above 2000 psi. In discussion Abrams favors the pull-out type specimen for bond tests.

7. Gilkey, H. J. "Water Gain and Allied Phenomena in Concrete Work" Engr. News-Record, 98: 242-244, Feb. 10, 1927.

The author discusses and illustrates the tendency of water to travel upward through any workable concrete mixture until the mixture stiffens. Moisture is trapped beneath all horizontal surfaces, thus making the bond between solid particles less perfect on the under sides than on the upper sides. Though water gain is never absent in a workable mixture, it is aggravated by excess fluidity, over vibration, or other over-working, and poor gradation.

8. Edwards, L. N., and H. F. Greenleaf "Experimental Tests of Concrete-Steel Bond" Proc., ASTM, 28,II:584-598, 1928. Also discussions by E. F. Kelley, W. A. Slater, D. A. Abrams, F. E. Richart, and C. F. Derleth, p 599-604.

A report on pull-out tests using vertically and horizontally cast specimens. Also he used methods in accordance with the best field practice and brought out the reduction in bond due to improper or sloppy technique.

9. Richart, F. E., and V. P. Jensen. "Tests of Plain and Reinforced Concrete Made with Hydite Aggregates" Bul. 237, Engr. Exp. Sta., University of Illinois, 1931.

Using three kinds of aggregate gave similar results. Of

special importance is the observation that bond does not increase in proportion to the compressive strength of the concrete and that bond stresses may be dangerously high for strong concretes when the permissible bond is taken as a fixed percentage of the ultimate compressive strength. This conclusion has been substantiated by nearly all the more recent investigations.

10. Teller, L. W., and G. W. Davis. "Effect of Materials and Methods of Placing on Strength and Other Properties of Concrete Bridge Floor Slabs" Public Roads, 12:237-266, December, 1931. Results of bond tests are given on pgs. 251-256.

Both horizontal and vertical castings in 11 types of slabs were placed by the "Vibrolithie" process, by the aid of an air hammer, by use of an electric tamper, and by hand tamping. Initial slip occurred at much higher loads for deformed than for plain bars. Bond strength of vertically cast specimens averaged about 15 percent higher than those horizontally cast specimens. Hand placing gave lowest bond resistances, especially for deformed bars. For plain bars kind of aggregate had a negligible effect on bond, but for deformed bars crushed stone gave greatest bond strength and "Haydite" least.

11. Shank, J. R. "Effect of Bar Surface Conditions in Reinforced Concrete" Engr. Exp. Sta. News, Engr. Exp. Sta., Ohio State University, 6, 3:9-12, June 1934.

Tests using bars sand blasted, rusted in earth, rusted from weather, covered with cement grout, clean and uncoated, and covered with oil. Greater bond was developed by bars having

special importance is the observation that bond does not increase in proportion to the compressive strength of the concrete and that bond stresses may be dangerously high for strong concretes when the permissible bond is taken as a fixed percentage of the ultimate compressive strength. This conclusion has been substantiated by nearly all the more recent investigations.

10. Teller, L. W., and C. W. Davis. "Effect of Materials and Methods of Placing on Strength and Other Properties of Concrete Bridge floor Slabs" Public Roads, 12:237-266, December, 1931. Results of bond tests are given on pgs. 251-256.

Both horizontal and vertical castings in 11 types of slabs were placed by the "Vibrolithic" process, by the aid of an air hammer, by use of an electric tamper, and by hand tamping. Initial slip occurred at much higher loads for deformed than for plain bars. Bond strength of vertically cast specimens averaged about 15 percent higher than those horizontally cast specimens. Hand placing gave lowest bond resistances, especially for deformed bars. For plain bars kind of aggregate had a negligible effect on bond, but for deformed bars crushed stone gave greatest bond strength and "Haydite" least.

11. Shank, A. R. "Effect of Bar Surface Conditions in Reinforced Concrete" Engr. Exp. Sta. News, Engr. Exp. Sta., Ohio State University, 6, 3:9-12, June 1934.

Tests using bars sand blasted, rusted in earth, rusted from weather, covered with cement grout, clean and uncoated, and covered with oil. Greater bond was developed by bars having

Sand blasted or rusted surfaces and by bars coated with cement grout than by clean, uncoated bars.

12. Withey, M. O. "Bond of Vibrated Concrete" Proc., High-way Research Board, 16: 193-206, 1936.

Bond varied with water-cement ratio, but was not greatly affected by slump or cement content.

13. Wernisch, G. R. "Bond Studies of Different Types of Reinforcing Bars" Jour., Amer. Concr. Inst., 9: 145-164. Nov.-Dec. 1937. Also Proc., Amer. Concr. Inst., 34: 145-164, 1938.

A range of bond values was found for different types of deformed bars. He concludes that twin-twisted bars show no advantage over plain bars with respect to bond. Threaded bars showed their usual superiority in developing bond resistance.

14. Davis, R. E., E. H. Brown, and J. W. Kelley, "Some Factors Influencing the Bond Between Concrete and Reinforcing Steel". Proc., ASTM, 38,II:394-406, 1938.

A highly condensed report on a number of reconnaissance tests investigating type of cement, richness of mixture, orientation at casting, shape of plain bar, vibration during placing, use of "T. D. A. ", and of puzzolan as admixtures. One of his 12 conclusions is that compressive strength is not a proper criterion of bond resistance.

15. Gilkey, H. J., S. J. Chamberlin, and R. W. Beal. "The Bond Between Concrete and Steel". Jour. Amer. Concr. Inst., 16: 1-20 Sept. 1938. Also Proc. Amer. Concr. Inst. 35: 1-20, 1939.

sand blasted or mashed surfaces and by bars coated with cement grout than by clean, uncoated bars.

12. Withey, M. O. "Bond of Vibrated Concrete" Proc., High-way Research Board, Jor 1923-206, 1926.

Bond varied with water-cement ratio, but was not greatly affected by slump or cement content.

13. Wernisch, G. H. "Bond studies of different Types of Reinforcing Bars" Jour., Amer. Concr. Inst., 9: 145-164. Nov.-Dec. 1937. Also Proc., Amer. Concr. Inst., 34: 145-164, 1938.

A range of bond values was found for different types of deformed bars. He concludes that twin-twisted bars show no advantage over plain bars with respect to bond. Threaded bars showed their usual superiority in developing bond resistance.

14. Davis, R. E., H. R. Brown, and J. W. Kelly, "Some Factors Influencing the Bond Between Concrete and Reinforcing Steel". Proc., ASTM, 36,II:394-406, 1936.

A highly condensed report on a number of recommendations tests investigating type of cement, richness of mixture, orientation at casting, shape of plain bar, vibration during placing, use of "T. P. A. ", and of pozzolan as admixtures. One of the 12 conclusions is that compressive strength is not a proper criterion of bond resistance.

15. Gilkey, H. J., S. J. Chamberlin, and R. W. Beal. "The Bond Between Concrete and Steel". Jour. Amer. Concr. Inst., 16: 1-20 Sept. 1936. Also Proc. Amer. Concr. Inst. 35: 1-20, 1939.

A survey of answered and unanswered problems of bond with brief discussions.

16. Menzel, C. A. "Some Factors Influencing Results of Pull-Out Bond Tests". Jour., Amer. Concr. Inst., 10: 517-544, June, 1939.

A major contribution investigation type of bar surface, type and position of lug, length of embedment, consistency of concrete, leakage from mold, thickness of concrete around bar, position of bar with respect to placing of concrete, settlement of concrete under bar, age at test, vibration and richness of mixture. Maximum resistances for deformed bars were developed with pull-out specimens vertically cast with settlement away from the loaded end.

17. Johnston, B. G., and K. C. Cox. "The Bond Strength of Rusted Deformed Bars". Jour., Amer. Concr. Inst., 12: 57-72, Sept., 1940.

The bond resistance developed with rusted bars was considerably greater than with unrusted bars.

18. Gilkey, H. J., S. J. Chamberlin, and R. W. Beal. "Bond Between Concrete and Steel". Iowa Eng. Expr. Sta. Bulletin 147, 1940.

An excellent study involving bond research over a period of four years investigating many questions concerning bond, among which are strength of concrete, length of embedment, surface texture and diameter of the bar, age, curing; autogenous healing, residual drag, influence of stress in steel, effect of depth of cover, nature of bond resistance and bond action in a pull-out specimen. This very comprehensive report is an excellent

A survey of answered and unanswered problems of bond with brief discussions.

16. Menzel, C. A. "Some Factors Influencing Results of Pull-Out Bond Tests". Jour., Amer. Concr. Inst., 10: 517-544, June, 1939.

A major contribution investigation type of bar surface, type and position of lug, length of embedment, consistency of concrete, leakage from mold, thickness of concrete around bar, position of bar with respect to placing of concrete, settlement of concrete under bar, age at test, vibration and richness of mixture. Maximum resistances for deformed bars were developed with pull-out specimens vertically cast with settlement away from the loaded end.

17. Johnston, B. G., and K. C. Cox. "The Bond Strength of Rusted Deformed Bars". Jour., Amer. Concr. Inst., 12: 57-72, Sept., 1940.

The bond resistance developed with rusted bars was considerably greater than with unrusted bars.

18. Gilkey, H. J., [illegible] J. Chamberlin, and H. W. Beal. "Bond Between Concrete and Steel". Iowa Eng. Expr. Sta. Bulletin 147, 1940.

An excellent study involving bond research over a period of four years investigating many questions concerning bond, among which are strength of concrete, length of embedment, surface texture and diameter of the bar, age, curing; autogenous healing, residual drag, influence of stress in steel, effect of depth of cover, nature of bond resistance and bond action in a pull-out specimen. This very comprehensive report is an excellent

guide to the investigation of the many questions concerning bond.

19. "Precast Box Beams for High Strength" Engr. News 125:838-9, December 19, 1940.

An application of relatively thin slab sections.

20. Watstein, S. "Bond Stress in Concrete Reinforcing Bars" Technical News Bulletin, U. S. National Bureau of Standards, 285: 4-5 January, 1941.

The results of the tests of the deformed bar specimens indicated the presence of lug action at the loaded end prior to "first slip" at the unloaded end of the bar.

21. Rolun, R. C., P. E. Olsen, and R. F. Kinnane "Bond Strength of Reinforcing Bars Embedded Horizontally in Concrete" Highway Research Abstracts, Feb. 1943.

22. Dunham, C. W. "Theory and Practice of Reinforced Concrete". 2nd Edition, 1944.

23. "Proposed Test Procedure to Determine Relative Bond Values of Reinforcing Bars" report of ACI Committee 208, Amer. Concrete Inst., J 16:273-92 F 45.

Wherein the committee outlines tentative specifications for determining bond resistances using the beam method.

24. Amirikian, A. "Precast Concrete Structures". Jour. ACI, Dec. 1946.

How precasting can be utilized to provide the framing of a great variety of structures. Bent types of framing as used in buildings; precast shell framing suitable for floating structures.

guide to the investigation of the many questions concerning bond.

19. "Precast Box Beams for High Strength" Engr. News 125:836-9, December 19, 1940.

An application of relatively thin slab sections.

20. Watstein, S. "Bond Stress in Concrete Reinforcing Bars" Technical News Bulletin, U. S. National Bureau of Standards, 285: 4-5 January, 1941.

The results of the tests of the deformed bar specimens indicated the presence of lug action at the loaded end prior to "first slip" at the unloaded end of the bar.

21. Rolun, R. C., P. E. Olsen, and R. F. Kinnane "Bond Strength of Reinforcing Bars Embedded Horizontally in Concrete" Highway Research Abstracts, Feb. 1943.

22. Dunham, C. W. "Theory and Practice of Reinforced Concrete". 2nd Edition, 1944.

23. "Proposed Test Procedure to Determine Relative Bond Values of Reinforcing Bars" report of ACI Committee 208, Amer. Concrete Inst., J 16:273-92 E 45.

Wherein the committee outlines tentative specifications for determining bond resistances using the beam method.

24. Amirikian, A. "Precast Concrete Structures". Jour. ACI, Dec. 1946.

Now precasting can be utilized to provide the framing of a great variety of structures. Bent types of framing as used in buildings; precast shell framing suitable for floating structures

25. Clark, A. P. "Comparative Bond Efficiency of Deformed Concrete Reinforcing Bars", Jour. of Research of the National Bureau of Standards, Vol. 37, Dec. 1946.

The report covers the first phase of a comprehensive investigation on the bond efficiency of deformed concrete reinforcing bars. The pull-out tests covered 17 different commercial designs of reinforcing bars. He establishes that a certain group of bars was definitely superior to the others.

26. Watstein, D. "Distribution of Bond Stress in Concrete Pull-Out Specimens", diag. Amer. Concr. Inst. Journal 18: 1041-52 May, 1947.

27. Amirikian, A. "Precast Concrete Storehouses". Amer. Concr. Inst. Journal, June 1947: 1097-1116.

The description of the basic features of design, fabrication, and erection of the framing of two concrete warehouses, the first structures built entirely of prefabricated concrete elements, utilizing the thin-shell technique.

28. Corbetta, L. P. "Precast Concrete Warehouse Construction" Jour. Amer. Concr. Inst., June, 1947.

25. Clark, A. P. "Comparative Bond Efficiency of Deformed Concrete Reinforcing Bars", Jour. of Research of the National Bureau of Standards, Vol. 37, Dec. 1946.

The report covers the first phase of a comprehensive investigation on the bond efficiency of deformed concrete reinforcing bars. The pull-out tests covered 17 different commercial designs of reinforcing bars. He establishes that a certain group of bars was definitely superior to the others.

26. Watstein, D. "Distribution of Bond Stress in Concrete Pull-Out Specimens", Diag. Amer. Concr. Inst. Journal 16: 1041-52 May, 1947.

27. Amirikian, A. "Precast Concrete Storehouses". Amer. Concr. Inst. Journal, June 1947: 1097-1116.

The description of the basic features of design, fabrication, and erection of the framing of two concrete warehouses, the first structures built entirely of prefabricated concrete elements, utilizing the thin-shell technique.

28. Colbetta, E. . "Precast Concrete Warehouse Construction Jour. Amer. Concr. Inst., June, 1947.

DATE DUE			

Thesis 6886
C6 Collins
A study of minimum
bar spacing for bond
in thin-shell precast
concrete.

Thesis 6886
C6 Collins
A study of minimum
bar spacing for bond
in thin-shell precast
concrete.

thesC6
A study of minimum bar spacing for bond
3 2768 002 08382 6
DUDLEY KNOX LIBRARY